NIAGARA MOHAWK POWER CORPORATION
d/b/a NATIONAL GRID
WHITEHALL-BLISSVILLE #7 115 kV TRANSMISSION LINE
CONDUCTOR CLEARANCE REFURBISHMENT PROJECT

REPORT TO THE STATE OF NEW YORK
PUBLIC SERVICE COMMISSION
ON THE INSTALLATION OF
NON-ARTICLE VII ELECTRIC TRANSMISSION FACILITIES
PURSUANT TO 16 NYCRR PART 102

Prepared for:

nationalgrid

1 Apollo Drive
Glens Falls, NY 12801

Prepared by:

TRC
Results you can rely on

10 Maxwell Drive
Clifton Park, NY 12065

November 2016

Contact Information

Correspondence and inquiries concerning this Part 102 Report should be directed to the following persons:

Kenneth Gavurnik
Project Manager, Transmission Work Delivery
National Grid
300 Erie Boulevard West
Syracuse, New York 13202
(315) 428-5347
kenneth.gavurnik@nationalgrid.com

Tracy Miller
Lead Environmental Scientist
National Grid
1 Apollo Drive
Glens Falls, NY 12801
518-761-5981
Tracy.Miller@nationalgrid.com

Lisa M. Zafonte, Esq.
Senior Counsel
National Grid
175 E. Old Country Road
Hicksville, New York 11801
516-545-5246
Lisa.zafontemaffei@nationalgrid.com

WHITEHALL-BLISSVILLE #7 115KV TRANSMISSION LINE CLEARANCE CONDUCTOR REFURBISHMENT PROJECT REPORT PURSUANT TO PART 102

TABLE OF CONTENTS

1.0 INTRODUCTION AND PROJECT DESCRIPTION 1-1

1.1 Project Overview 1-1
1.2 Need for Project 1-1
1.3 Project Setting 1-1
1.3.1 Line Installation and Previous Work 1-2
1.3.2 Information Required by Section 102.3 1-2
1.4 Engineering Information 1-6
1.4.1 Proposed Project Schedule 1-8

2.0 ENVIRONMENTAL RESOURCES 2-1

2.1 Project Description 2-1
2.2 Access 2-1
2.3 Grading 2-1
2.4 Stormwater and Erosion Control 2-2
2.5 Standards and Best Management Practices 2-2
2.6 Rare, Threatened and Endangered Species 2-2
2.6.1 Federally-Listed Species 2-3
2.6.2 State-Listed Species 2-4
2.7 Waterbody and Wetland Delineations 2-4
2.7.1 Waterbodies 2-5
2.7.2 Wetlands 2-5
2.8 Agricultural Land 2-6
2.9 Cultural Resources 2-6
2.10 Avoidance and Minimization of Impacts 2-6
2.11 Permits, Approvals, and Permissions 2-7
2.12 Right-of-Way Ownership 2-7

3.0 ECONOMY, EFFICIENCY AND CARE FOR PUBLIC SAFETY 3-1

3.1 Applicable Codes, Requirements and Standards 3-1
3.2 Engineering Details 3-1

4.0 ADVANTAGE-DISADVANTAGE ANALYSIS 4-1

4.1 Purpose and Applicability 4-1
4.2 Project Costs 4-1
4.2.1 Summary of Capital Construction Costs 4-2
4.2.2 Summary of Construction Expense Costs 4-2
4.2.3 Summary of Right-Of-Way Acquisition Costs 4-2

4.2.4 Summary of Anticipated Total Operation and Maintenance Costs 4-3
4.3 Technological Considerations 4-3
4.4 Assessment of Environmental Impacts 4-4
4.4.1 Conclusion 4-4

5.0 REFERENCES 5-6

LIST OF TABLES

Table 1. Previous Work Performed on the Whitehall-Blissville #7 Line 1-2
Table 2. § 102.3 (a) Classes of Areas Requiring Advantage-Disadvantage Analysis 1-3
Table 3. § 102.3 (b) Classes of Areas Not Requiring Advantage-Disadvantage Analysis 1-4
Table 4. Whitehall-Blissville #7 115kV Line Clearance Conductor Refurbishment Work ... 1-7
Table 5. Whitehall-Blissville #7 Line Existing Conductor and Shieldwire Information 1-8
Table 6. List of Permits/Approvals for the Whitehall-Blissville #7 CCR Project 2-7

LIST OF FIGURES

Figure 1: Project Location Map
Figure 2: Agricultural Districts Map

LIST OF EXHIBITS

Exhibit A. Project Data Form
Exhibit B. Project Location Maps on Aerial Photographs
Exhibit C. Engineering Drawings and Cross-Sections
Exhibit D. Agency Correspondence

LIST OF ACRONYMS

BMP	best management practice
CCR	Conductor Clearance Refurbishment
CWA	Clean Water Act
DC	double circuit
EG	Environmental Guidance
ESRI	Environmental Systems Research Institute
FEMA	Federal Emergency Management Agency
GIS	Geographic Information System
GP	General Permit
IPaC	Information, Planning and Conservation System
NAIP	National Agriculture Imagery Program
NESC	National Electrical Safety Code
NERC	North American Electric Reliability Corporation
NFIP	National Flood Insurance Program
NOI	Notice of Intent
NYCRR	New York Codes, Rules and Regulations
NYS	New York State
NYISO	New York Independent System Operator
NYSDEC	New York State Department of Environmental Conservation
NYSDAM	New York State Department of Agriculture and Markets
NYSDOT	New York State Department of Transportation
NYSOPRHP	New York State Office of Parks, Recreation and Historic Preservation
NYSPSC	New York State Public Service Commission
NYNHP	New York Natural Heritage Program
NWI	National Wetlands Inventory
NWP	Nationwide Permit
PSF	pounds per square foot
ROW	right-of-way
SHPO	State Historic Preservation Office
SPDES	State Pollutant Discharge Elimination System
SSESC	Standards and Specifications for Erosion and Sediment Control
SWPPP	Stormwater Pollution Prevention Plan
TROWMP	Transmission Right-of-Way Management Program
USACE	United States Army Corps of Engineers
USFWS	United States Fish and Wildlife Service
USGS	United States Geologic Survey
VELCO	Vermont Electric Power Company

1.0 INTRODUCTION AND PROJECT DESCRIPTION

1.1 Project Overview

Niagara Mohawk Power Corporation d/b/a National Grid ("National Grid" or the "Company") proposes to conduct a clearance refurbishment project on the Whitehall-Blissville #7 115 kV Transmission Line (Whitehall-Blissville #7 Line). The Whitehall-Blissville #7 Line originates at the Whitehall Substation in the Town of Whitehall in Washington County, New York and terminates at the Blissville Substation in the Town of Poultney in Rutland County, Vermont. This Line runs for approximately six (6) miles within New York State before crossing the border into Vermont, where ownership transfers to the Vermont Electric Power Company ("VELCO") (See Figure 1: USGS Location Map, below).

1.2 Need for Project

The Whitehall-Blissville #7 Line Conductor Clearance Refurbishment ("CCR") Project (the "Project") is a maintenance project which is necessary to provide system reliability to the electric utility end users, as well as provide for public safety in areas where structure replacement or other methods are used to mitigate substandard clearances and maintain thermal ratings. As part of its engineering assessment, National Grid utilizes the National Electrical Safety Code ("NESC") clearance values to determine areas with substandard clearance. National Grid adheres to a specific timeline to address substandard clearances to comply with New York Independent System Operator ("NYISO") standards and guidelines related to facility ratings (see NYISO's Manual 24 - Reliability Analysis Data Manual, Sections 2.2 and 3.2). Timely completion of this work is essential to mitigate potential impacts to customer reliability and public safety.

The identified substandard spans were analyzed in accordance with the current version of the National Grid PR.06.01.010 Vertical Clearance Analysis Procedure ("Version 5.3"). The Project will increase clearances of those spans to bring them into compliance with Version 5.3. As part of the Project, National Grid proposes the replacement of five (5) structures and the replacement/relocation of one (1) structure to adhere to the above noted conditions. The Project requires the preparation of this Part 102 report because: the Whitehall-Blissville #7 Line has a voltage greater than 65 kV; the proposed work takes place over a distance greater than one (1) mile; and four (4) proposed structure replacements require height increases greater than 10 feet (16 NYCRR §102.2(a)(2)).

1.3 Project Setting

The Whitehall-Blissville #7 Line runs from the Whitehall Substation in the Town of Whitehall in Washington County, New York and terminates at the Blissville Substation in the Town of

Poultney in Rutland County, Vermont. This Line runs for approximately six (6) miles within New York State before crossing the border into Vermont, where ownership transfers to VELCO (See Figure 1: USGS Location Map). Aerial photographs depicting the location of the proposed work are included in Exhibit B. Existing land uses are reflected in the current aerial photographs.

The Whitehall-Blissville #7 Line primarily traverses through agricultural areas. The Project area similarly traverses through agricultural areas and is adjacent to one (1) residential property. The Line crosses U.S. Route 4 and State Route 21, along with multiple lower traffic roads.

The ROW for the Project is owned by National Grid. ROW ownership is further described in Section 2.11.

1.3.1 Line Installation and Previous Work

The Whitehall-Blissville #7 Line was built prior to 1973, with transmission drawings dated 1958. The Whitehall-Blissville #7 Line originates at the Whitehall Substation and terminates at the Blissville Substation in Poultney, Vermont (at Structure 55).

Previous work on the Whitehall-Blissville #7 Line is summarized in the Table 1 below.

Table 1. Previous Work Performed on the Whitehall-Blissville #7 Line

Year	Work Performed
2012	Replaced Structures 17, 18, and 27
2013	Replaced Structures 53 and 54
	Replaced Insulators on Structure 35
2015	Replaced Structures 16, 24, 41, 42, 44, 45, 49, 50, 51, and 55
	Replaced Insulators on Structure 26
	Replaced Crossarm on Structure 46

The previous Whitehall-Blissville #7 Line work listed in Table 1 was necessitated by the results of National Grid's routine in-field inspections focusing on the physical condition of equipment and structures. The current proposed Project work involves a different focus, i.e., the address of substandard clearances to comply with NYISO standards and guidelines.

1.3.2 Information Required by Section 102.3

In order to minimize impacts of the Project on the natural and man-made environment, TRC reviewed the Whitehall-Blissville #7 Line in its entirety during Project development and design. Work being performed as part of the Project which is subject to 16 NYCRR Part 102

requirements are four (4) structure replacements due to the height increases of their replacements, which will exceed 10 feet. Therefore, although this Part 102 report may reference Classes of Areas along the entire line, determination of whether or not Classes of Areas listed in Section 102.3 of 16 NYCRR Part 102 were only evaluated in the vicinity of structures which are proposed to be replaced as part of this Project.

TRC reviewed the sources presented in Tables 2. § 102.3 (a) and 3. § 102.3 (b) to determine if any of the areas outlined in Section 102.3 of 16 NYCRR Part 102 were located within the vicinity of the Project. Geographic Information System ("GIS") data reviewed was primarily provided by the New York State GIS Clearinghouse (http://gis.ny.gov) and applicable layers were reviewed as noted. Additional sources reviewed as part of the analysis are presented in Tables 2. § 102.3 (a) and 3. § 102.3 (b), below. As indicated in Exhibit A, the Project Data Form, construction will occur within one (1) priority area specified in Section 102.3(a).

Table 2. § 102.3 (a) Classes of Areas Requiring Advantage-Disadvantage Analysis

§ 102.3 (a) Classes of Areas	Sources Reviewed/Agencies Contacted	Located in Project Area Subject to Part 102?
National and State parks, preserves, reservations, landmarks, and monuments formally so designated and acquired for their natural or cultural value by appropriate State and Federal agencies (included would be historic landmarks, national landmarks, national monuments and trails, and wild and scenic rivers).	New York State Office of Parks, Recreation & Historic Preservation (NYSOPRHP) Cultural Resources Information System (CRIS) (Accessed 2016) United States Geological Survey (USGS) National Map (Accessed 2016) National Wild and Scenic Rivers System Online Mapping (Accessed 2016)	Yes (2, 3, 12, 13, and 15)
Historic sites formally so designated by National or State agencies but without acquisition of rights or ownership sufficient for the purpose of preservation.	New York State Historic Preservation Office (SHPO) Cultural Resources Information System (CRIS) (Accessed 2016) Consultation letter sent to NYSHPO (08/17/2016)	No
Central business districts in cities and villages.	National Agriculture Imagery Program (NAIP) 2015	No
Developed and partly developed residential areas with an existing density of one or more dwelling	Tax Maps	No

§ 102.3 (a) Classes of Areas	Sources Reviewed/Agencies Contacted	Located in Project Area Subject to Part 102?
units per acre, as shown on approved subdivision maps, occupying a minimum contiguous area of 20 acres, all or a portion of which would be traversed by the proposed transmission facility right-of-way.		

Based on the review above, it was determined that the work subject to Part 102 will be conducted within one (1) priority area specified in Section 102.3 (a). Therefore, in accordance with Section 102.4, an Advantage-Disadvantage Analysis is required.

An additional review was performed to determine if any of the classes of areas specified in Section 102.3 (b) are present in the vicinity. As indicated in Exhibit A, the Project Data Form, construction will occur within one (1) priority areas specified in Section 102.3 (b).

Table 3. § 102.3 (b) Classes of Areas Not Requiring Advantage-Disadvantage Analysis

§ 102.3 (b) Classes of Areas	Sources Reviewed/Agencies Contacted	Located in Project Area Subject to Part 102?
Areas of outstanding natural or scenic value which are preserved by non-profit private agencies but which have not been formally so designated by national or State agencies.	NAIP (2015)	No
Areas of outstanding cultural value (e.g., attractive pastoral scenes, locations of noteworthy architectural and/or social import both within and outside specific sites) that have been formally designated by the appropriate governmental authority	Consultation letter sent to NYSHPO (08/17/2016) NYS Department of State, Office of Planning & Development GIS Database (Accessed 2016)	No
Existing local (city, town, village and county) parks and open space areas that have been formally established by governmental or private authorities.	NYS GIS Program Office (Accessed 2016) USGS National Map (2015) NYSDEC GIS Database (Accessed 2016)	No

§ 102.3 (b) Classes of Areas	Sources Reviewed/Agencies Contacted	Located in Project Area Subject to Part 102?
Public and semipublic facilities such as cemeteries, educational, correctional and medical facilities, and military installations.	New York State Education Department GIS Data (Accessed 2016) NYS GIS Program Office (Accessed 2016) NYSDEC GIS Database (Accessed 2016)	No
Existing light industrial and commercial areas (e.g., industrial parks, shopping centers, office building complexes).	NYS GIS Program Office (Accessed 2016)	No
Partially developed residential areas where the subdivision will have an eventual population density of one or more dwelling units per acre, as shown on approved subdivision maps, comprising a minimum contiguous area of 20 acres or a portion of which is traversed by the proposed transmission facility right-of-way.	NYS GIS Program Office (Accessed 2016)	No
Areas of outstanding cultural value (e.g., attractive pastoral scenes, locations of noteworthy architectural and/or social import both within and outside specific sites that lend attractiveness to a neighborhood or community) that have not been formally designated by governmental or private authority.	NAIP (2015)	No
Residential areas with less population density than those specified in preceding categories.	NAIP (2015)	No
Planned and zoned undeveloped light industrial, commercial and residential areas.	NAIP (2015)	No

§ 102.3 (b) Classes of Areas	Sources Reviewed/Agencies Contacted	Located in Project Area Subject to Part 102?
Managed woodlands (e.g., commercial and other productive forests).	NYSDEC GIS Database (Accessed 2016)	No
Agricultural districts established in accordance with Article 25-AA of the Agriculture and Markets Law, and other farmlands.	Washington County Agricultural Districts Map (2012)	Yes (Structure 15)
Existing and planned heavy industrial areas.	Tax Maps	No
Woods and open lands other than those included within areas specified in any priority area above.	NAIP (2015)	No

Based on the review above, it was determined that the work subject to Part 102 will be conducted within one (1) priority area, as listed in Section 102.3 (b). Potential impacts as part of the Project are described in further detail in Section 2.

1.4 Engineering Information

The existing Whitehall-Blissville #7 115 kV Line is generally supported on single circuit wood H-Frame structures. The proposed new structure replacements/installations for this Project will consist of wood H-frame and three wood pole deadend structures (see Exhibit C). A summary of the proposed scope of work is presented in Table 4, below, and mapping showing Project structure locations is included in Exhibit B.

Table 4. Whitehall-Blissville #7 115kV Line Clearance Conductor Refurbishment Work

Structure	Type of Work	Existing Structure Type	Existing height above ground (ft.)	Replacement Structure Type	Proposed height above ground (ft.)	Latitude/Longitude
2	Replace Structure	Three Pole Wood Deadend	65.5	Three Wood Pole H-Frame Deadend	79	43.54908427 -73.37931433
3	Replace Structure	Two Pole Wood H-Frame Suspension	65.5	Two Wood Pole H-Frame Suspension	79	43.5495659 -73.37674768
12	Replace Structure	Two Pole Wood H-Frame Deadend	61	Two Wood Pole H-Frame Deadend	74.5	43.55228659 -73.35957695
13	Replace/Relocate Structure	Two Pole Wood H-Frame Suspension	65.5	Two Wood Pole H-Frame Suspension	79	43.55267269 -73.35756867
15	Replace Structure	Two Pole Wood H-Frame Suspension	61	Two Wood Pole H-Frame Suspension	70	43.55342103 -73.35361333
21	Replace Structure	Two Pole Wood H-Frame Suspension	61	Two Wood Pole H-Frame Suspension	70	43.55572944 -73.34140838

Existing conductor and shieldwire information is presented in Table 5, below.

Table 5. Whitehall-Blissville #7 Line
Existing Conductor and Shieldwire Information

Mainline		
Parameter	**Conductor**	**Shieldwire**
Type	795.0 kcmil 36/1 "Coot"	3/8" H.S. Steel
Diameter (in)	1.040	0.360
Wt./foot (lb./ft.)	0.805	0.273
Tension at NESC Heavy (lbs.)	5,000 (Approx.)	4,000 (Approx.)

Exhibit C contains typical engineering drawings of the following:

- Proposed and existing structures, including hardware to be installed,
- Type and size of existing conductors,
- Structure foundation installation methods, and
- Method of grounding.

The new proposed structures will be direct-embedded foundations (*i.e.,* no concrete foundation) and installed in nine (9) to 15 foot deep augured (or drilled in bedrock) holes (see Exhibit C). The holes will be stabilized with the use of steel culverts set vertically. The poles will be placed in the culverts and backfilled with crushed stone and native soil. Installation methods for embedded poles, as well as method of grounding, are provided in the engineering details in Exhibit C.

The Project does not include new or modified interconnection facilities.

No grading is proposed or necessary for mitigating substandard clearances as part of the Project.

1.4.1 Proposed Project Schedule

Project construction is proposed to begin in January 2017. Target date for completion of the Project is April 2017.

2.0 ENVIRONMENTAL RESOURCES

The following section describes the environmental resources in the vicinity of the Project as well as a discussion of the potential impacts of the construction on those environmental resources. Exhibit B depicts the land use, wetlands and streams on aerial photography within the vicinity of the Project.

2.1 Project Description

The Project includes the replacement of five (5) existing structures and the replacement/relocation of one (1) structure (see Exhibit C). A description of the existing land use present along the Project ROW is provided in Section 1.3. Replacement of existing structures will take place within the developed ROW which will minimize and/or avoid potential impacts to adjacent and nearby existing or planned land uses. Adjacent land uses may experience some temporary, short-term disturbances and inconveniences associated with construction. No permanent impacts to land use or natural resources will occur as a result of the Project.

2.2 Access

Proposed access routes for the Project are presented in Exhibit B. In most locations, public roads will be utilized during construction to access the ROW. Construction of temporary access roads within the ROW will be minimal in number and scope, but necessary for completion of the Project. Temporary construction access is also proposed through some abutting properties. National Grid will coordinate with the appropriate landowners for permission to use these accesses prior to construction. Construction of temporary access roads within the transmission line ROW is expected to be minor in size and scope.

Unimproved temporary construction access roads will be used as-is to the extent possible, and will be restored to their pre-existing conditions following the completion of Project construction in accordance with National Grid's Environmental Guidance ("EG") for ROW Access, Maintenance and Construction Best Management Practices (BMPs; EG-303; 2010).

Some short term impacts associated with the disruption of ongoing farming activities may occur as a consequence of the Project; however, National Grid will attempt to minimize short term impacts through scheduling and, where possible, coordinating construction activities with ongoing farm operations. In addition, all work will be conducted utilizing BMPs in order to minimize and/or eliminate impacts to agricultural lands.

2.3 Grading

No grading is proposed for mitigating substandard clearances.

2.4 Stormwater and Erosion Control

National Grid will prepare a Stormwater Pollution Prevention Plan ("SWPPP") for coverage under NYSDEC State Pollutant Discharge Elimination System ("SPDES") General Permit for Construction Activities (GP-0-15-002). NYSDEC requires coverage under GP-0-15-002 for any "construction activities involving soil disturbances of one (1) or more acres; including disturbances of less than one (1) acre that are part of a larger common plan of development or sale that will ultimately disturb one (1) or more acres of land; excluding routine maintenance activity that is performed to maintain the original line and grade, hydraulic capacity or original purpose of a facility." A Notice of Intent ("NOI") will be submitted to NYSDEC Central Office certifying that the Project will be in compliance with the technical requirements of GP-0-15-002. Development of this SWPPP will incorporate design elements in conformance with the New York State Standards and Specifications for Erosion and Sediment Control (SSESC 2016).

2.5 Standards and Best Management Practices

As described in Section 2.2, access roads will be restored to their pre-existing conditions following the completion of Project construction in accordance with National Grid's EG-303 (2010). Additional impacts include temporary wetland and waterbody crossings, as described in Section 2.7 below. In addition to the details provided in Section 2.7, BMPs will be implemented as necessary in accordance with National Grid's Environmental Guidance for Protected Waters (EG-302NY, 2010) to minimize impacts to such resources.

National Grid holds a NYSDEC permit for maintenance, including vegetation management, within the ROW. This permit (NYSDEC GP#0-0000-01147) allows for continued maintenance of vegetation within the ROW to allow for utility maintenance activities, such as inspection, repair and restoration of the utility line itself. The Whitehall-Blissville #7 Line will continue to be managed under this permit during construction and once the Project is completed. In addition, National Grid will manage vegetation within the ROW in accordance with its *Transmission Right-of-Way Management Program* ("TROWMP") (revised April 2014 and approved by the Commission in Case 10-E-0155).

2.6 Rare, Threatened and Endangered Species

The following sections describe correspondence with the United States Fish and Wildlife Service ("USFWS"), New York Natural Heritage Program ("NYNHP"), and the New York State Department of Environmental Conservation ("NYSDEC") regarding the potential impact to rare, threatened and endangered ("RTE") species, as well as avoidance measures proposed as part of the Project.

2.6.1 Federally-Listed Species

A list of federally-listed species and designated critical habitats that may be present in the vicinity of the Project was obtained from the USFWS Information, Planning and Consultation ("IPaC") system on August 16, 2016 (see Exhibit D). Upon the receipt of this list, the interested party must then determine whether the species listed are likely to occur in the Project area based on information provided by the USFWS, the NYSDEC, or other reference materials. The USFWS identified the following two (2) species as potentially occurring in the vicinity of the Project.

- Indiana bat (*Myotis sodalis*) - Endangered
- Northern long-eared bat *(Myotis septentrionalis*) – Threatened

The identified species are described in further detail in the following sections.

2.6.1.1 Indiana bat (Myotis sodalis)

The Indiana bat is a federally- and New York State-listed endangered species. In New York, the knowledge of species distribution is limited to the known wintering locations, which are the caves and mines in which the bat hibernates. The eight (8) known hibernacula are limited to six (6) counties within New York State; Washington County is not included in this list (NYSDEC 2015).

The Indiana bat mates in the fall prior to hibernation and in the spring, emerges and travels to wooded or semi-wooded habitats far from the winter hibernacula for the summer (USFWS 2004; NYNHP 2013). After the spring emergence, females group to form small maternity colonies, where they give birth to their young. These colonies are located in the crevices or under loose bark in large dead or living trees. Roost trees consist of hollow trees, either dead or alive, and trees with exfoliating bark, and may be located in upland areas or floodplain forests (USFWS 2004; USFWS 2012). Occasionally man-made structures, such as sheds or bridges, will also serve as roosts (USFWS 2004).

The NYNHP has not identified any known populations of Indiana bats within 1 mile of the Whitehall-Blissville #7 Line (see Exhibit D). Areas within the immediate vicinity of the ROW are comprised of forests that may have tree species suitable for Indiana bat roosts; however, any tree clearing or trimming of branches will be conducted in the winter months, eliminating potential for encounter or impact to this species.

2.6.1.2 Northern Long-Eared Bat (Myotis septentrionalis)

Recent population decline of the northern long-eared bat has resulted in the listing of this species as a threatened species under the Endangered Species Act (USFWS 2015). This species is currently listed as threatened in New York State, and is found statewide. There are currently known occurrences of the northern long-eared bat which have been documented by the NYSDEC by County and Town. According to these surveys completed in May of 2016, Washington County has two (2) known occurrences, however, both locations are outside the Project area.

The northern long-eared bat is similar to the Indiana bat in its use of caves and mines for hibernation and is also found in wooded or semi-wooded habitat during the summer months. Specific areas where they hibernate tend to have very high humidity, and when sighted, droplets of water are often seen on their fur (USFWS 2013). This bat also utilizes crevices and loose bark on trees for roosting although it is believed to be less selective of roost trees than the Indiana bat (USFWS 2013).

No caves or mines which would be likely and suitable habitat have been identified in the Project work areas. Areas within the immediate vicinity of the ROW are comprised of forests that may have tree species suitable for northern long-eared bat roosts; however, any tree clearing or trimming of branches will be conducted in the winter months, eliminating potential for encounter or impact to this species.

2.6.2 State-Listed Species

A request concerning the presence/absence of state-listed species and designated critical habitats in the vicinity of the Project was submitted to the NYNHP on August 17, 2016. The NYNHP responded on September 29, 2016 (see Exhibit D). Based on the correspondence with the NYNHP, there were no records indicating the presence of any rare or state listed animals or plants occurring within, or in the immediate vicinity of, the Project.

2.7 Waterbody and Wetland Delineations

TRC performed wetland and waterbody delineations within the Project ROW in August 2016. Exhibit B depicts the locations of TRC-delineated wetlands, the National Wetland Inventory ("NWI") mapped wetlands and NYSDEC-regulated wetlands and waterbodies located in the vicinity of the Project. The following section summarizes the waterbodies and wetlands traversed by the Project, and anticipated impacts and methods that will be used to cross the resources.

2.7.1 Waterbodies

Four (4) replacement structures (Structures 2, 3, 12, and 13) will require temporary stream crossings for access or are in close proximity to water resources.

Structure 3 is located in close proximity to TRC-delineated stream S-1, identified as Mud Brook, a NYSDEC Class D stream. Although S-1 is outside the required workspace for Structure 3, this stream will be crossed, along with TRC-delineated stream S-2, for access to Structure 2. Impacts will be short term and temporary in nature; no permanent effects are anticipated.

Structure 12 is located in close proximity to TRC-delineated stream S-3, however it is outside the proposed workspace.

Structure 13 is located in close proximity to TRC-delineated streams S-3 and S-4. To minimize impacts, wetland matting will be utilized during construction. Any impacts to S-3 as a result of construction activities and/or access will be short term and temporary in nature; no permanent effects are anticipated.

2.7.2 Wetlands

Two (2) of the replacement structures (Structures 3 and 12) are located within or in close proximity to wetland resources.

The workspace required for Structure 3 is located within TRC-delineated wetland W-2. Therefore the structure replacement work will occur within the boundaries of W-2.

The workspace required for Structure 12 is located in close proximity to TRC-delineated wetland W-3. Structure replacement work will occur within the boundaries of W-3, and therefore, temporary impacts are anticipated to occur.

Matting and/or low-pressure tracked equipment will be used to the extent practicable in wetlands. Wetland topsoil will be salvaged as much as possible to backfill and restore the area surrounding the structure and encourage re-establishment of wetland vegetation. Mitigation measures will be implemented in environmentally sensitive areas such as wetlands and streams to avoid and minimize impacts and to preserve existing conditions where possible. Temporary wetland impacts will measure approximately 0.06 acre in size and are attributable to the replacement of Structures 3 and 12.

National Grid will obtain all the necessary permits and approvals prior to any work commencing in these areas.

2.8 Agricultural Land

There is one (1) structure replacement (Structure 15) proposed for this Project that will occur within a mapped agricultural district (NYSDAM 2015; see Figure 2). Additionally, access to this structure is through an active agricultural field. There are also agricultural districts adjacent to the ROW.

It is anticipated that some short term impacts associated with the disruption of ongoing farming activities may occur as a consequence of the Project; however, National Grid will attempt to minimize short term impacts through scheduling and, where possible, coordinating construction activities with ongoing farm operations. In addition, all work will be conducted utilizing BMPs in order to minimize and/or eliminate impacts to agricultural lands.

2.9 Cultural Resources

According to the New York State Historic Preservation Office's ("SHPO") Cultural Resources Information System ("CRIS") database, and the areas targeted for structure work are not located within an archeologically sensitive area. A consultation letter was sent to the New York State Office of Parks, Recreation and Historic Preservation ("OPRHP") through CRIS on August 22, 2016. A response was received from SHPO on September 8, 2016 reporting that this project will have no effect on any historic properties. Copies of the consultation letters with SHPO are included in Exhibit D.

2.10 Avoidance and Minimization of Impacts

Public roads will be utilized during construction to access the ROW. Users of those roads in the vicinity of the Project may experience some temporary disturbance and inconvenience associated with the construction activities, primarily in the form of minor traffic delays at locations where the ROW crosses public roadways to be used by construction vehicles to access the ROW. There will also be some unavoidable noise from construction vehicles and equipment usage. These impacts will be temporary and short-term, and are not expected to be significant.

To further minimize potential construction impacts to adjacent landowners, National Grid will provide timely information to adjacent property owners and/or tenants regarding the planned construction activities and schedule. National Grid will also coordinate with New York State Department of Transportation ("NYSDOT"), Washington County, the Town of Whitehall, and local law enforcement agencies, as applicable, to develop and implement traffic control measures to ensure safe and adequate traffic operations along roadways to be used by construction vehicles.

2.11 Permits, Approvals, and Permissions

Table 6 identifies the permits required for the Project and continued operation of the Whitehall-Blissville #7 Line and the status of pending permit applications.

Table 6. List of Permits/Approvals for the Whitehall-Blissville #7 CCR Project

Agency	Permit/Approval	Status
US Fish and Wildlife Service (USFWS)	Threatened and Endangered Species Review	IPaC Review Conducted August 16, 2015
New York State Department of Environmental Conservation (NYSDEC)	Construction SPDES General Permit (GP-0-15-002)	NOI scheduled to be submitted at least 5 business days in advance of the start of construction
New York State Office of Parks, Recreation and Historical Preservation: State Historic Preservation Office (SHPO)	Section 106 Review	Consultation Letter sent August 22, 2016; Response received September 8, 2016
New York Natural Heritage Program (NYNHP)	Threatened and Endangered Species Review	Consultation Letter sent August 22, 2016; Response received September 29, 2016
New York State Public Service Commission (NYSPSC)	Part 102 Report Acceptance	Pending

A copy of correspondence received to date on the Project from the various regulatory agencies is provided in Exhibit D.

2.12 Right-of-Way Ownership

All work associated with the Project will be performed within the existing ROW owned by National Grid. Prior to construction, National Grid will coordinate with appropriate landowners for permission to use abutting properties for temporary access.

3.0 ECONOMY, EFFICIENCY AND CARE FOR PUBLIC SAFETY

3.1 Applicable Codes, Requirements and Standards

National Grid's CCR Program ensures that applicable facilities comply with the required operating temperature and loading conditions set forth in NESC (2012) Section 23. Final engineering studies for the Project will be completed on or about November 30, 2016.

3.2 Engineering Details

Cross-sections showing typical Project locations along the ROW are included in Exhibit C. Based on a desktop review of the National Pipeline Mapping System and company records, there are no underground gas transmission line crossing under the Whitehall-Blissville #7 Line. Prior to construction, Dig Safely New York will be notified of the proposed excavations and any underground facilities identified will be marked before construction begins.

This Project does not involve upgrading of conductors or changing of voltages along the Whitehall-Blissville #7 Line, and the configuration will remain the same. Consequently, National Grid does not intend to conduct an electric and magnetic field strength study as part of this Project.

Delivery of poles may require short-term temporary lane restrictions while off-loading poles to the ROW; however a maintenance and protection of traffic plan is not expected to be needed because flag persons, construction cones, and construction signs will be used, as necessary. National Grid will follow all applicable NYSDOT requirements.

4.0 ADVANTAGE-DISADVANTAGE ANALYSIS

4.1 Purpose and Applicability

The purpose of an Advantage-Disadvantage Analysis is to provide a framework by which the features or facts which support one or another mode of construction can be identified clearly, specifically underground versus overhead construction of a transmission line. An Advantage-Disadvantage Analysis has been developed for the Project because work will be conducted within one (1) priority area specified in Section 102.3(a):

- National and State parks, preserves, reservations, landmarks, and monuments formally so designated and acquired for their natural or cultural value by appropriate State and Federal agencies (included would be historic landmarks, national landmarks, national monuments and trails, and wild and scenic rivers).

Sources reviewed to make this determination are included in Table 2. This analysis identified Route 4 as a National and State Scenic Byway and an "All American Road". Evaluation of the alternatives for construction and installation of replacement Structures 2, 3, 12, 13, and 15 within this priority area are discussed below.

Two (2) alternatives exist to address the substandard clearances for the purposes of this analysis:

- Installation of replacement structures to continue supporting the existing overhead transmission line,
- Underground installation of the spans not currently meeting clearance requirements

National Grid's preferred alternative is to maintain the transmission line as overhead. The costs, technological considerations, and environmental impacts of the underground alternative are discussed in the following sections.

4.2 Project Costs

The following subsections discuss the Project costs associated with the portion of the Project within the priority area described above. Costs for both the proposed aboveground structures and the underground transmission line alternative are presented in the following subsections.

4.2.1 Summary of Capital Construction Costs

An evaluation of capital construction costs associated with both the overhead and underground alternatives was conducted for the installation of five (5) replacement structures (Structures 2, 3, 12, 13, and 15) within close proximity to the priority area described above. All these structures are within close proximity to the Route 4 corridor. Furthermore, replacement work will require access both north and south off of this National and State Scenic Byway.

The overhead option involves the installation of five (5) replacement structures (Structures 2, 3, 12, 13, and 15) and is expected to have a capital construction cost of approximately $600,000 based on an average construction costs for installation of 115 kV transmission line in the Northeastern United States. The underground alternative to correct the substandard spans between existing structures expected to have a capital construction cost of approximately $3,500 per linear foot; multiplying this by the 2,221 linear feet for these spans yields a total capital construction cost of approximately $7,773,500. Therefore, implementation of the Project's preferred option of an overhead transmission line within the priority area results in a total Project savings of approximately $7,173,500.

In summary, the construction of the proposed transmission line as an underground transmission line in the vicinity of the residential area would result in an estimated $7,950,000 dollar increase in capital construction costs for the Project.

4.2.2 Summary of Construction Expense Costs

Construction expenses (i.e., project management, overhead and licensing costs needed to bring the project to the point of construction) have an estimated unit cost of $50.00 per linear foot for the overhead transmission line option. Based on a total project distance of 2,221 linear feet, the Project's construction expenses are estimated to total approximately $111,050 for the overhead alternative. Costs for the underground transmission line option are expected to be anywhere from three (3) to ten (10) times the estimated overhead alternative's construction expense costs.

4.2.3 Summary of Right-Of-Way Acquisition Costs

The portion of the Project will be located within existing National Grid ROW and does not require additional ROW acquisition for either alternative.

4.2.4 Summary of Anticipated Total Operation and Maintenance Costs

Based on National Grid's experience operating both underground and overhead transmission lines, it is expected that annual operation and maintenance costs associated with both alternatives would be the same, at approximately 1.0% of capital construction costs.

4.3 Technological Considerations

National Grid's preferred technology for refurbishment of overhead transmission lines is replacement in-kind with overhead construction. CCR projects often involve the installation of intermediate structures to mitigate substandard clearances. This allows for a cost effective system that is relatively simple to operate and maintain, and which provides equivalent reliability.

Discussion of the issues associated with undergrounding portions of the Project follow. An underground segment in an overhead transmission line is generally referred to as a "dip" in the line. Installing a dip (or multiple dips) in a transmission line creates operational issues with the line. One of the most significant issues with underground transmission lines is extended repair times. An overhead transmission line can typically be repaired in 48 hours or less, while an underground transmission line repair time is typically two (2) weeks to a month. It is important to note that an outage of a short underground dip in a mixed overhead/underground line takes out the entire transmission line segment (overhead and underground) until the underground line can be repaired. Transmission lines typically serve large areas; the longer repair times for underground lines can increase the possibility of blackouts to these areas.

Many faults on overhead transmission lines are temporary in nature, and it is frequently possible to re-energize an overhead transmission line after a brief interruption (measured in seconds). This is done automatically with a process known as reclosing. Faults on underground transmission lines are almost never temporary in nature, and reclosing into an underground cable fault causes more cable damage, possibly extending already long underground outages. If dips are installed in transmission lines, it is typically necessary to install protective relaying equipment to distinguish between an overhead line fault and an underground line fault. This adds cost and complexity to the overhead to underground transition.

Underground transmission lines also have different electrical characteristics than overhead lines. This makes it more difficult to keep voltages within acceptable limits, and makes the

transmission system more difficult to operate. These effects increase as the underground segment length increases.

4.4 Assessment of Environmental Impacts

The overhead construction to complete the proposed Project in the vicinity of residential priority areas will not result in permanent adverse environmental impacts. The environmental impacts of the underground alternative are discussed below.

There are documented (TRC-delineated) wetlands that will be in direct contact with construction equipment in the vicinity of Structures 3 and 12. The underground alternative to replacing these overhead structures would result in larger environmental impacts, due to a larger disturbed area in order to install the line. Excavation and removal of vegetation creates an opportunity for invasive species or undesirable vegetation to colonize. Disruption to the soils from installation of the underground lines can cause the soils to lose structural integrity resulting in poor drainage and increased erodibility. Underground installation will also require a longer construction time and restoration period, resulting in longer disruptions to surrounding residential land uses.

4.4.1 Conclusion

An Advantage-Disadvantage Analysis was conducted for the Project because it will impact one (1) priority area of Section 102.3(a), as the Project involves work within "National and State parks, preserves, reservations, landmarks, and monuments formally so designated and acquired for their natural or cultural value by appropriate State and Federal agencies (included would be historic landmarks, national landmarks, national monuments and trails, and wild and scenic rivers)," as shown on approved maps.

Within the National and State Scenic Byway and "All American Road" corridor described above, the Project includes the installation of replacement structures (Structures 2, 3, 12, 13, and 15) within an existing National Grid transmission ROW that is currently occupied by double circuit ("DC") 115 kV transmission lines. The installation of the new intermediate structures will be located completely within the National Grid ROW and will not require additional easements from landowners.

No significant benefit is gained from utilizing an underground configuration in these locations. As noted above, the Project involves the replacement of existing structures currently located along existing ROW within close proximity to the Route 4 roadway corridor. The installation of the replacement structures near this Scenic Byway will not

result in adverse environmental impacts. Additional environmental disturbance would be expected with the underground option due to the need to excavate additional soil to install the underground line.

Most significantly, the undergrounding of portions of the transmission line within the priority areas would result in an estimated $7,173,500 increase in capital construction costs for the Project.

5.0 REFERENCES

Edinger, G.J., D.J. Evans, S. Gebauer, T.G. Howard, D.M. Hunt, and A.M. Olivero (editors). 2014. Ecological Communities of New York State. Second Edition. A revised and expanded edition of Carol Reschke's Ecological Communities of New York State. (Draft for review). New York Natural Heritage Program, New York State Department of Environmental Conservation, Albany, NY.

[FEMA] Federal Emergency Management Agency. 2014. National Flood Hazard Layer Web Map Service in Google Earth. Accessed December 15, 2015 at: http://www.fema.gov/national-flood-hazard-layer-nfhl

[NYSDAM] New York State Department of Agriculture & Markets. 2012. Agricultural Districts Mapping –Washington County. Cornell Institute for Resource Information Sciences. Accessed August 16, 2016 at: http://cugirdata.mannlib.cornell.edu/

[NYSDEC] New York State Department of Environmental Conservation. Environmental Resource Mapper. NYSDEC Division of Fish, Wildlife and Marine Resources. Albany, NY. Accessed August 16, 2016 at: http://www.dec.ny.gov/imsmaps/ERM/viewer.htm

[NYSDEC] 2016. New York State Standards and Specifications for Erosion and Sediment Control (SSESC). New York State Department of Environmental Conservation, Albany, NY.

[NYSDEC]. Indiana Bat (*Myotis sodalis*) Fact Sheet. Accessed August 16, 2016. http://www.dec.ny.gov/animals/6972.html?showprintstyles

[NYSDEC] Protection of the Northern Long-eared Bats. Protective Measures Required for Northern Long-eared Bats when Projects Occur within Occupied Habitat. August 16, 2016. http://www.dec.ny.gov/animals/106090.html

[NYSDOT] New York State Department of Transportation. 2015. New York State Scenic Byways. Accessed August 16, 2016 at: https://www.dot.ny.gov/display/programs/scenic-byways/maps

[USFWS] United States Fish and Wildlife Service. 2013. Endangered and Threatened Wildlife and Plants; 12-Month Finding on a Petition to List the Eastern Small-footed Bat and the Northern Long-Eared Bat as Endangered or Threatened Species; List the Northern Long-Eared Bat as an Endangered Species; Proposed Rule. Federal Register. Vol. 78, No. 191. December 15, 2015. Part III. Department of the Interior, Fish and Wildlife Service. Accessed August 16, 2016 online at: http://www.gpo.gov/fdsys/pkg/FR-2013-10-02/pdf/2013-23753.pdf

[USFWS] United States Fish and Wildlife Service. 2007. Revised May 2012. Indiana Bat

(*Myotis sodalis*) Draft Recovery Plan: First Revision. U.S. Fish and Wildlife Service, Fort Snelling, MN. 258 pp

[USFWS] United States Fish and Wildlife Service. 2015. Northern-Long Eared Bat (*Myotis septentrionalis*) Fact Sheet. Accessed August 16, 2016 at: http://www.fws.gov/midwest/endangered/mammals/nleb/nlebFactSheet.html

FIGURES

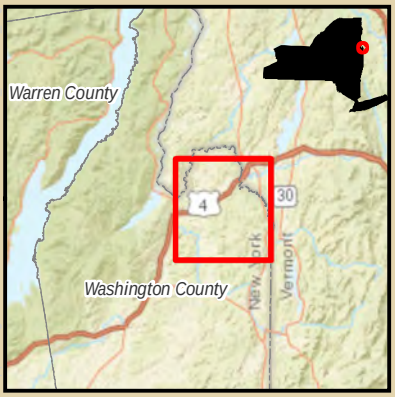

Legend

- Existing Structure to be Worked
- Replace Existing Structure
- Existing Transmission Line

N

0 0.5 1

Miles

Sources: ESRI, NGRID, TRC, USGS, NRCS

nationalgrid

Whitehall - Blissville #7

Figure 1 - Project Location Map

Created: 9/28/2016

TRC 14 Gabriel Drive Augusta, ME 04330

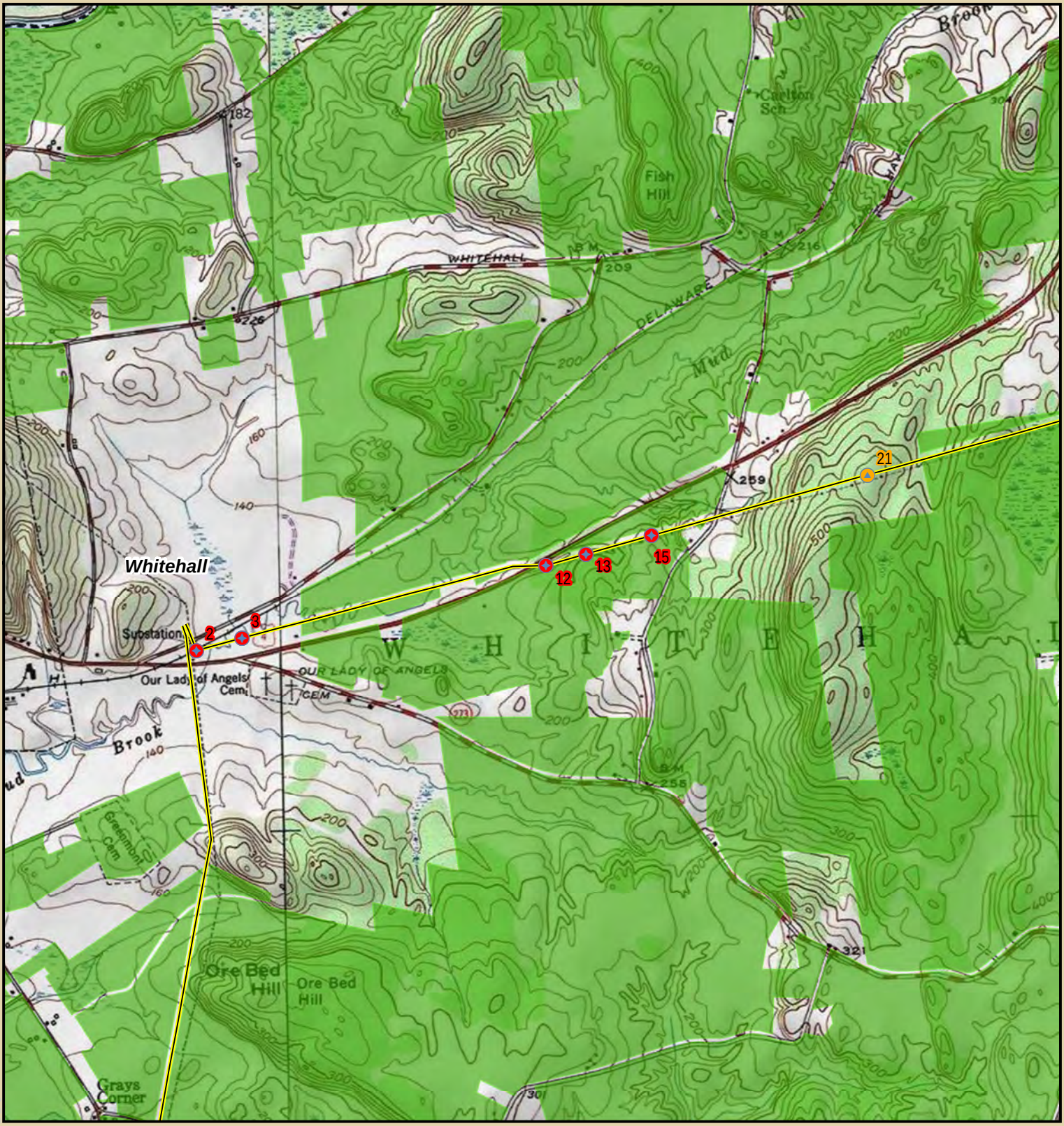

Legend

- Existing Structure to be Worked
- Replace Existing Structure
- Existing Transmission Line
- Agricultural Districts (NYSDAM)
- Town Boundary

N

0 1,000 2,000
Feet

Sources: ESRI, NGRID, TRC, USGS, NRCS

nationalgrid

Whitehall - Blissville #7

Figure 2 - Agricultural Districts Map

Created: 9/28/2016

TRC
14 Gabriel Drive
Augusta, ME 04330

EXHIBIT A

PROJECT DATA FORM

Part 102. Installation of Non-Article VII Electric Transmission Facilities

Line Name: Whitehall-Blissville #7

102.3 Classes of Areas	Will or Will Not be Traversed by the Proposed Transmission Facility/ROW	
	Will	Will Not
(a) For transmission lines in the following areas, the analysis required by Section 102.4 of this Part must be included in the report of the proposed construction:		X
(1) National and State parks, preserves, reservations, landmarks, and monuments formally so designated and acquired for their natural, scenic or cultural value by appropriate State and Federal agencies. (Included would be historic landmarks, national landmarks, national monuments and trails, and wild and scenic rivers.)	X	
(2) Historic sites formally so designated by National or State agencies but without acquisition of rights or ownership sufficient for the purpose of preservation.		X
(3) Central business districts in cities and villages.		X
(4) Developed and partly developed residential areas with an existing density of one or more dwelling units per acre, as shown on approved subdivision maps, occupying a minimum contiguous area of 20 acres, all or a portion of which would be traversed by the proposed transmission facility right-of-way.		X
(b) Other Areas for which reports, but without the analysis required by Section 102.4 of this Part, are required are:		
(1) Areas of outstanding natural or scenic value which are preserved by non-profit private agencies but which have not been formally so designated by National or State agencies.		X
(2) Areas of outstanding cultural value (e.g., attractive pastoral scenes, locations of noteworthy architectural and/or social import both within and outside specific sites) that have been formally designated by the appropriate governmental authority.		X
(3) Existing local (city, town, village and county) parks and open space areas that have been formally established by government or private authorities.		X
(4) Public and semi-public facilities such as cemeteries, educational, correctional and medical facilities and military installations.		X
(5) Existing light industrial and commercial areas (e.g., industrial parks, shopping centers, office building complexes).		X
(6) Partially developed residential areas where the subdivision will have an eventual population density of one or more dwelling units per acre, as shown on approved subdivision maps, comprising a minimum contiguous area of 20 acres or a portion of which is traversed by the proposed transmission facility right-of-way.		X

102.3 Classes of Areas	Will or Will Not be Traversed by the Proposed Transmission Facility/ROW	
	Will	**Will Not**
(7) Areas of outstanding cultural value (e.g., attractive pastoral scenes, locations of noteworthy architectural and/or social import both within and outside specific sites that lend attractiveness to a neighborhood or community) that have not been formally designated by a governmental or private authority.		X
(8) Residential areas with less population density than those specified in preceding categories.		X
(9) Planned and zoned undeveloped light industrial, commercial and residential areas.		X
(10) Managed woodlands (e.g., commercial and other productive forests).		X
(11) Agricultural districts established in accordance with Chapter 25-AA of the Agriculture and Markets Law, and other farmlands.	X	
(12) Existing and planned heavy industrial areas.		X
(13) Woods and open lands other than those included within areas specified in a priority area above.		X

EXHIBIT B

PROJECT LOCATION MAPS ON AERIAL PHOTOGRAPHS

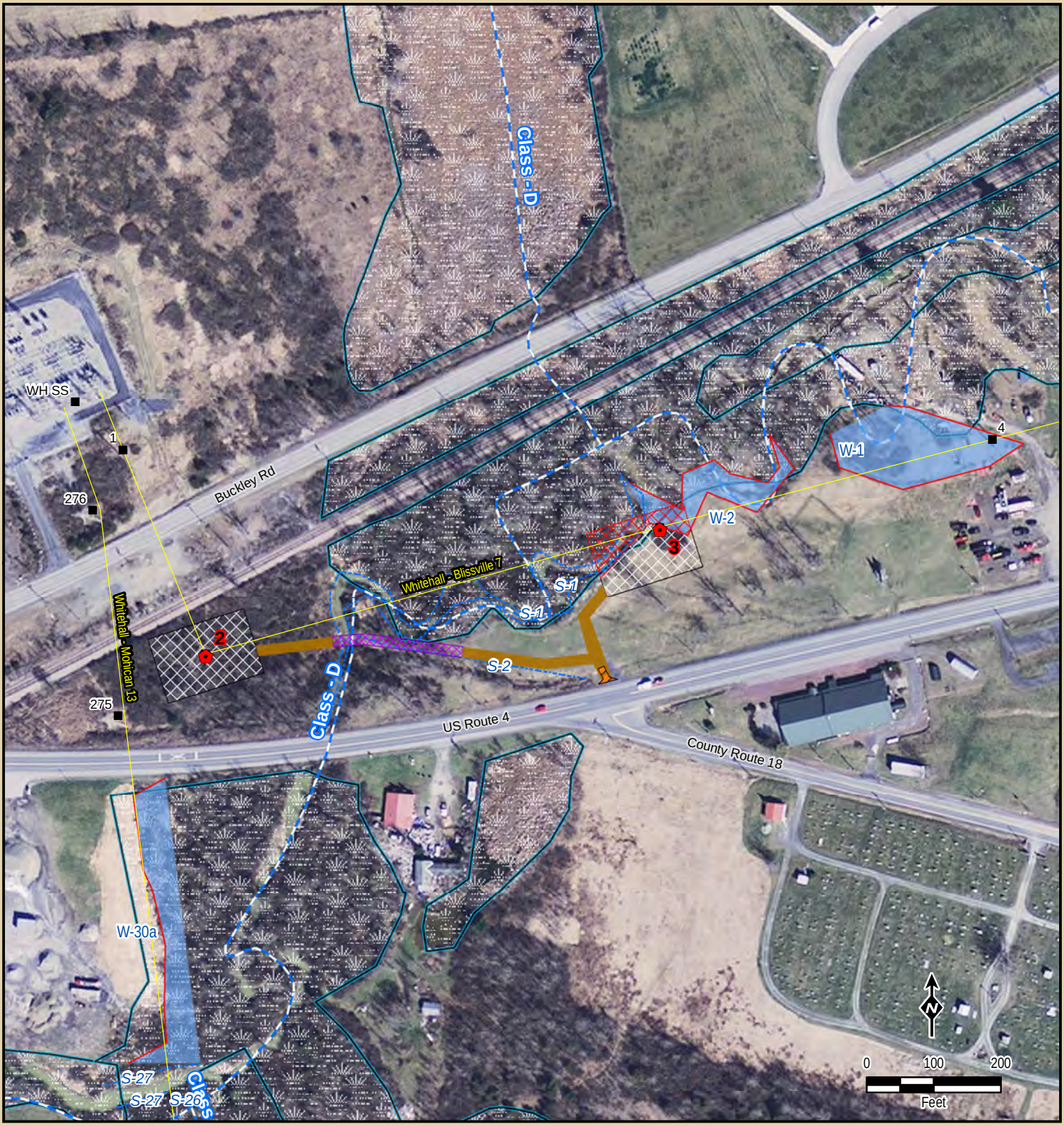

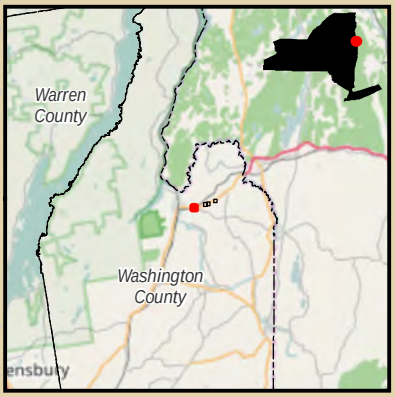

- Existing Structure
- Existing Structure to be Worked
- Replace Existing Structure
- Existing Transmission Centerline
- Access Road
- Construction Entrance
- Wetland Access
- Stream Crossing
- Work Area
- NYSDEC Stream Classification
- Streams (TRC)
- Wetland Boundary (TRC)
- Wetlands (TRC)
- Surface Water (TRC)
- NYSDEC Wetlands
- 100' NYSDEC Wetland Adjacent Area
- NWI Wetlands
- DEC Points of Interest
- Recreation Sites
- State Parks
- DEC Lands

Sources: ESRI, NGRID, TRC, USFWS, NYSDEC

nationalgrid

Whitehall - Blissville #7

Town of Whitehall
Washington County, New York

Exhibit B: Aerial Map

Map 1 of 4

Created: 9/28/2016

TRC
14 Gabriel Drive
Augusta, ME 04330

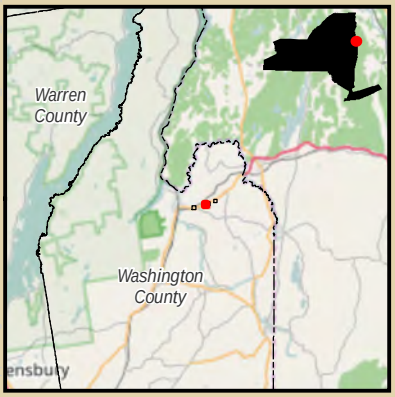

- Existing Structure
- Existing Structure to be Worked
- Replace Existing Structure
- Existing Transmission Centerline
- Access Road
- Construction Entrance
- Wetland Access
- Stream Crossing
- Work Area
- NYSDEC Stream Classification
- Streams (TRC)
- Wetland Boundary (TRC)
- Wetlands (TRC)
- Surface Water (TRC)
- NYSDEC Wetlands
- 100' NYSDEC Wetland Adjacent Area
- NWI Wetlands
- DEC Points of Interest
- Recreation Sites
- State Parks
- DEC Lands

Sources: ESRI, NGRID, TRC, USFWS, NYSDEC

nationalgrid

Whitehall - Blissville #7

Town of Whitehall
Washington County, New York

Exhibit B: Aerial Map

Map 2 of 4

Created: 9/28/2016

TRC

14 Gabriel Drive
Augusta, ME 04330

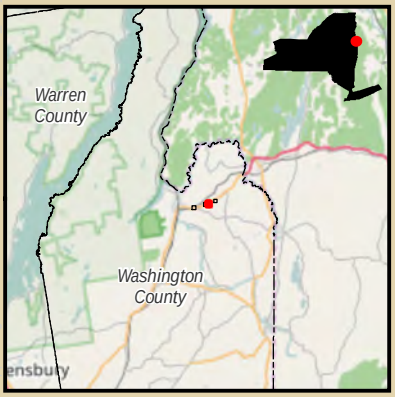

- Existing Structure
- Existing Structure to be Worked
- Replace Existing Structure
- Existing Transmission Centerline
- Access Road
- Construction Entrance
- Wetland Access
- Stream Crossing
- Work Area
- NYSDEC Stream Classification
- Streams (TRC)
- Wetland Boundary (TRC)
- Wetlands (TRC)
- Surface Water (TRC)
- NYSDEC Wetlands
- 100' NYSDEC Wetland Adjacent Area
- NWI Wetlands
- DEC Points of Interest
- Recreation Sites
- State Parks
- DEC Lands

Sources: ESRI, NGRID, TRC, USFWS, NYSDEC

nationalgrid

Whitehall - Blissville #7

Town of Whitehall
Washington County, New York

Exhibit B: Aerial Map

Map 3 of 4

Created: 9/28/2016

TRC
14 Gabriel Drive
Augusta, ME 04330

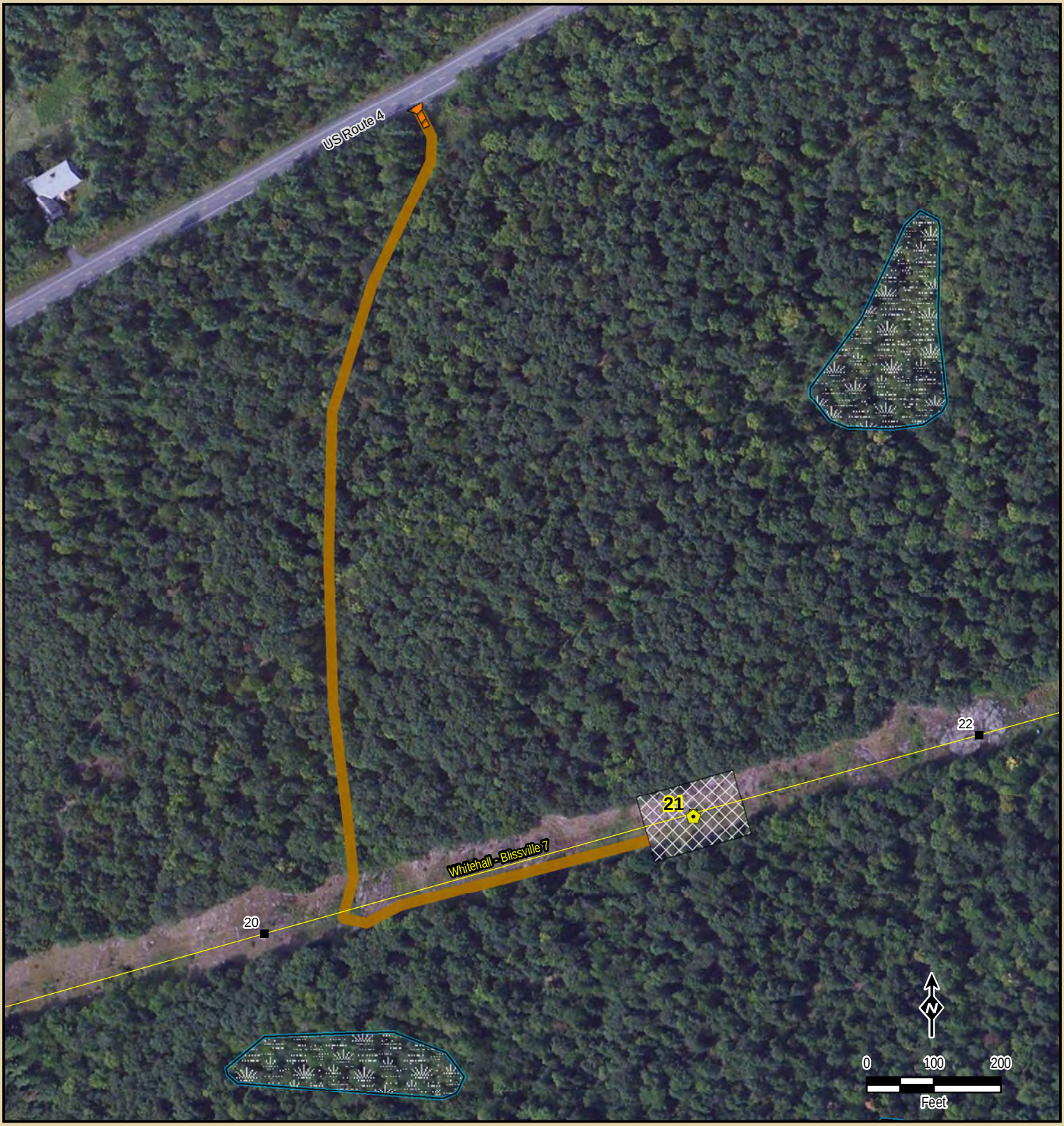

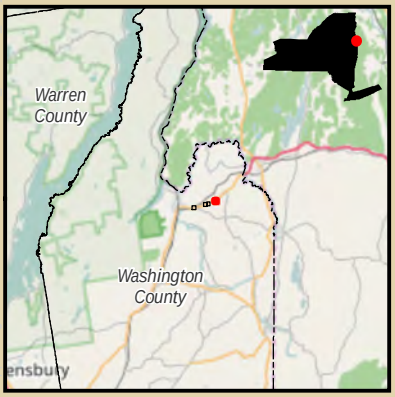

- Existing Structure
- Existing Structure to be Worked
- Replace Existing Structure
- Existing Transmission Centerline
- Access Road
- Construction Entrance
- Wetland Access
- Stream Crossing
- Work Area
- NYSDEC Stream Classification
- Streams (TRC)
- Wetland Boundary (TRC)
- Wetlands (TRC)
- Surface Water (TRC)
- NYSDEC Wetlands
- 100' NYSDEC Wetland Adjacent Area
- NWI Wetlands
- DEC Points of Interest
- Recreation Sites
- State Parks
- DEC Lands

Sources: ESRI, NGRID, TRC, USFWS, NYSDEC

nationalgrid

Whitehall - Blissville #7

Town of Whitehall
Washington County, New York

Exhibit B: Aerial Map

Map 4 of 4

Created: 9/28/2016

TRC
14 Gabriel Drive
Augusta, ME 04330

EXHIBIT C

ENGINEERING DRAWINGS AND CROSS-SECTIONS

CONFIDENTIALITY STATEMENT: THIS DOCUMENT CONTAINS CONFIDENTIAL AND PROPRIETARY INFORMATION OF NATIONAL GRID. IT IS TO BE USED BY AUTHORIZED CONTRACTORS FOR NATIONAL GRID SOLELY IN CONNECTION WITH THE SPECIFIC PROJECT FOR WHICH IT HAS BEEN TRANSMITTED. ANY OTHER USE, ITS TRANSMITTAL TO THIRD PARTIES, OR ITS REPRODUCTION WITHOUT PRIOR EXPRESS WRITTEN AUTHORIZATION OF NATIONAL GRID IS STRICTLY PROHIBITED.

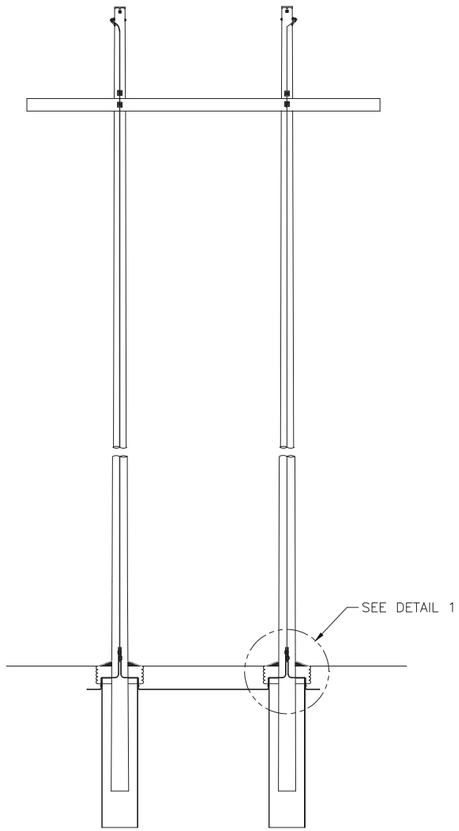

H–FRAME STRUCTURE

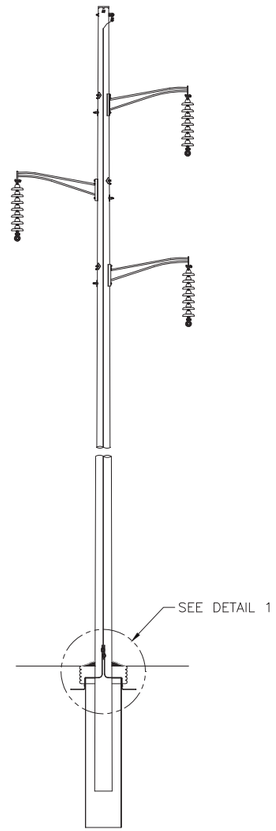

SINGLE POLE STRUCTURE

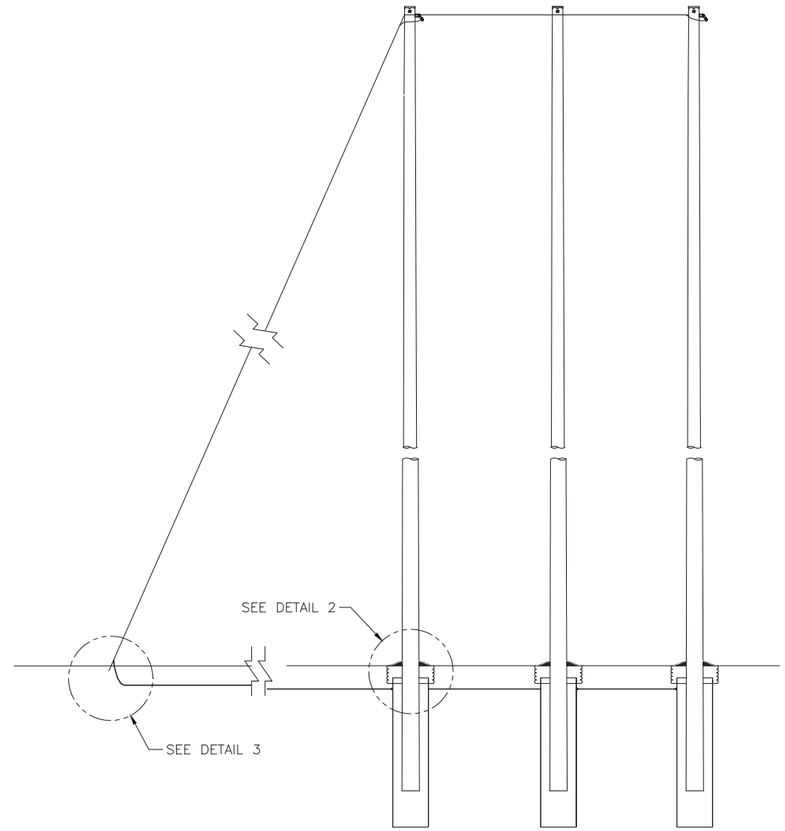

THREE POLE STRUCTURE

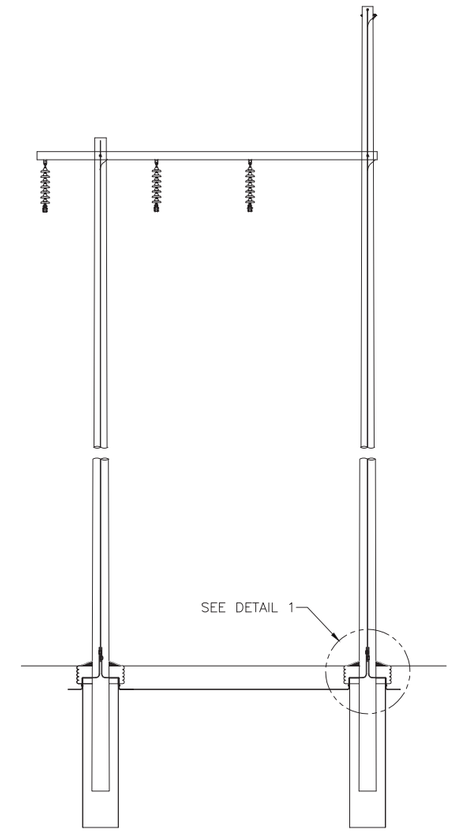

POLARM STRUCTURE

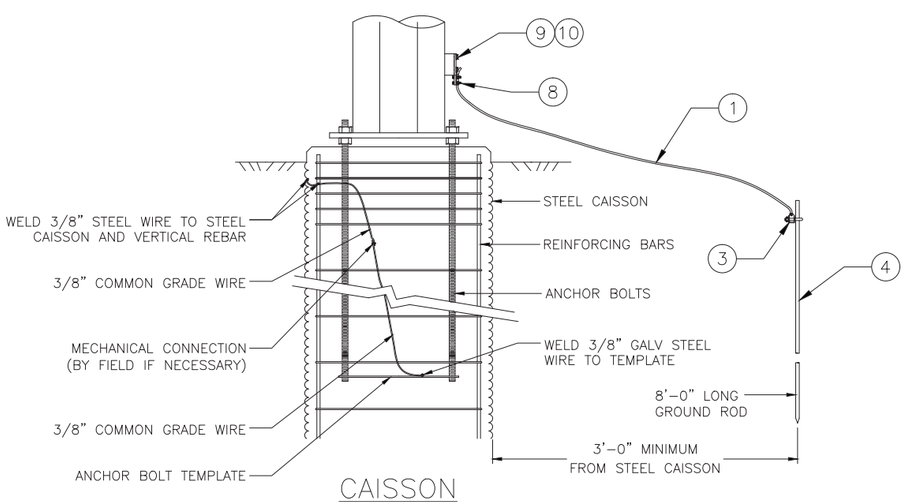

CAISSON

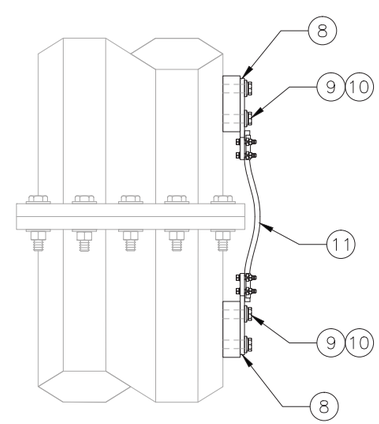

STEEL POLE FLANGE CONNECTION

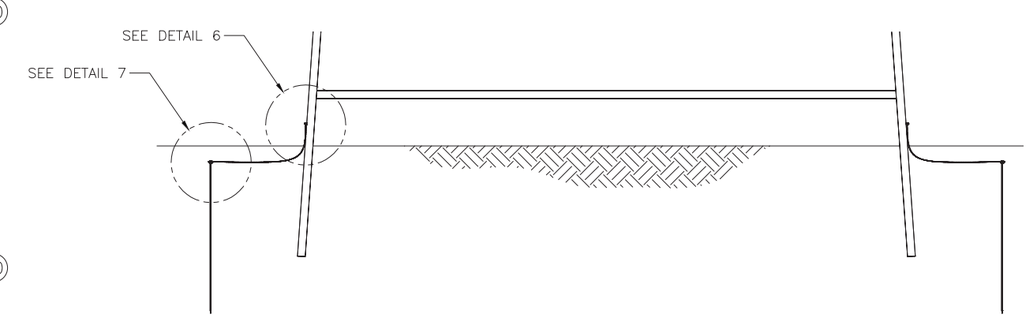

STEEL TOWER

VER	DATE	VERSION DESCRIPTION	PREPARED	REVIEWED	APPROVED
9	09/10/13	ADDED GROUNDING LUG, CORRECTED VIEW AND SECTION REFERENCES	TEC	KAD	LCS
10	11/25/13	SHEETS 2 & 5, CORRECT MATERIAL ITEM ID FOR GROUNDING LUG	TEC		
11	04/25/14	ADD DETAIL DESCRIPTIONS, ADD HDPE PIPE	TEC	KAD	
12	09/19/14	CLARIFY DETAIL 4 AND CORRECT GROUND ROD CLAMP ITEM ID ON PAGE 2	TEC	BMR	KAD
13	06/23/15	CHANGE WIRE MESH FROM ROLLED TO 5.4x6–0 FLAT MATS, SHEETS 4 & 5	TEC	BMR	KAD
14	11/30/15	ADDED PORTAL GROUNDING, 2 ADD WIRE, 2 REMOVE STAPLE, SHEETS 2,6	TEC	BMR	KAD
15	05/04/16	REPLACE GROUNDING LUG WITH 2 HOLE BRONZE TERMINAL CONNECTOR, SPF 272	TEC	BMR	KAD

VERSION 15

nationalgrid

PREPARED BY	JLC	02/02/10	
REVIEWED BY	JME	02/02/10	
APPROVED BY	MSB	02/02/10	
SCALE	NONE		
SHEET	1 OF 6		
INDEX	SP.06.01.301		

TRANSMISSION LINE STANDARD

GROUNDING DETAILS FOR TRANSMISSION LINE STRUCTURES

PRINTED COPIES ARE NOT DOCUMENT CONTROLLED. FOR THE LATEST AUTHORIZED VERSION PLEASE REFER TO THE ENGINEERING DEPARTMENT DOCUMENTS CABINET IN DOCUMENTUM

PRINTED 5/12/2016 10:53 AM

INCHES ON ORIGINAL

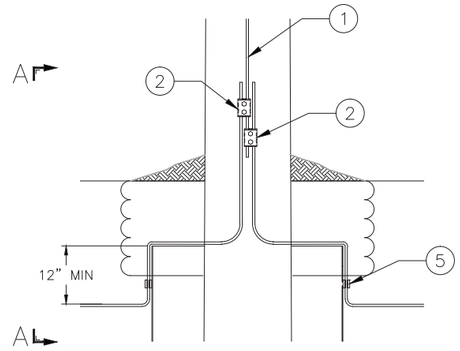

DETAIL 1
SCALE: 1"=1'-0"
POLE W/DOWNLEAD

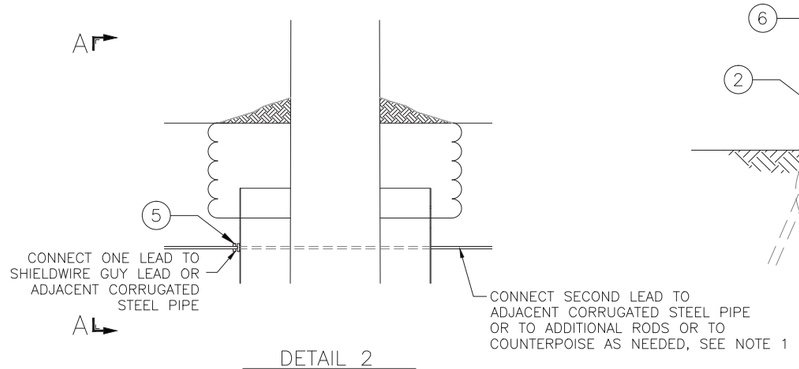

DETAIL 2
SCALE: 1"=1'-0"
POLE W/O DOWNLEAD

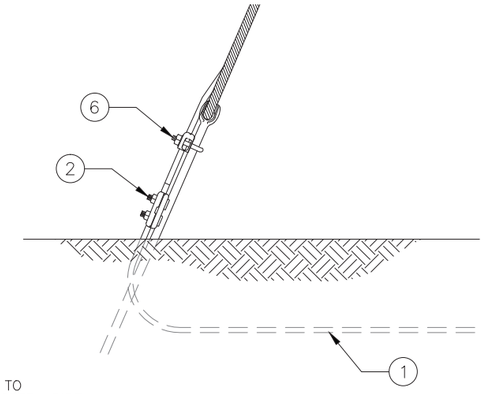

DETAIL 3
SCALE: 1/4"=1'-0"
BONDED SW GUY

MATERIAL LIST			
ITEM	DESCRIPTION	PS ITEM ID	SAP ITEM ID
1	3/8" Common Grade Steel Wire	5998530	9306353
2	Clamp, Parallel Groove, Bronze	5962562	9320554
3	Clamp, Ground Rod, 5/8"	3503390	9313417
4	Rod, Copperweld, Ground, 5/8" x 8'-0"	3503013	9313616
5	Clamp, Bronze	5105146	9309820
6	Ground Clamp for Anchor Rod	5986688	9320250
7	Nut, Hex 1/2" SS	7001719	9319754
8	2 BOLT BRONZE TERMINAL LUG	5965885	9320350
9	BOLT, STAINLESS STEEL, 1/2"x1"	5624913	9304788
10	WASHER, BELLEVILLE, STAINLESS STEEL, 1/2"	7006022	9319830
11	WIRE, #4, BARE, SOLID COPPER	4015001	9316523

NOTES:
1. TESTING OF GROUND IMPEDANCE FOR WOOD POLES SHALL BE PERFORMED ON EACH POLE AS SP.06.01.301, AND THE APPROPRIATE SUPPLEMENTARY GROUND GRIDS INSTALLED BASED ON THIS DRAWING AND AS SPECIFIED IN SP.06.01.301
2. TESTING OF GROUND IMPEDANCE FOR STEEL POLES OR LATTICE TOWERS IS NOT REQUIRED PER SP.06.01.301.
3. ARRANGEMENT OF GROUND RODS AND COUNTERPOISE SHOWN IN FIGURES; CONNECTIONS SHOWN IN REFERENCED DETAIL DRAWINGS
4. STRUCTURES WHICH DO NOT REQUIRE ADDITIONAL GROUND GRID INSTALLATION SHALL HAVE EXCESS GROUNDWIRE CUT OFF 12" BELOW GROUNDLINE OR BURIED AT LEAST 12" BELOW GROUNDLINE

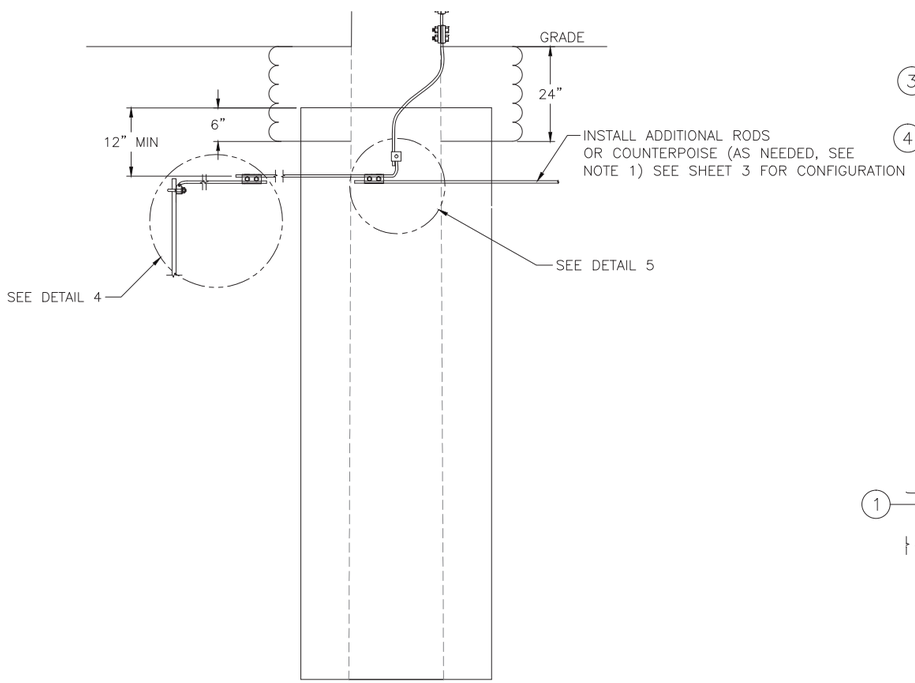

SECTION A-A
SCALE: 1" = 1'-0"
CORRUGATED STEEL PIPE GROUNDING ATTACHMENT

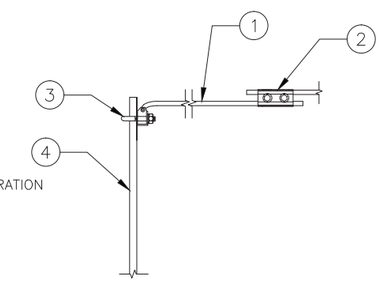

DETAIL 4
SCALE: 3" = 1'-0"
POLE GROUND ROD ATTACHMENT DETAIL (AS NEEDED) SEE NOTE 1

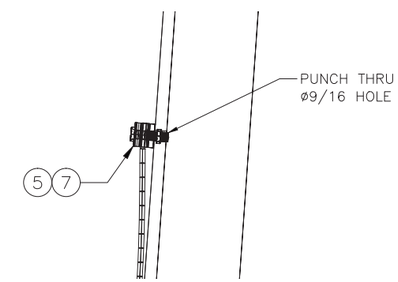

DETAIL 6
SCALE: 3" = 1'-0"
TOWER GROUNDING DETAIL

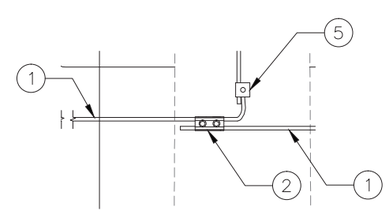

DETAIL 5
SCALE: 3" = 1'-0"
COUNTERPOISE ATTACHMENT DETAIL

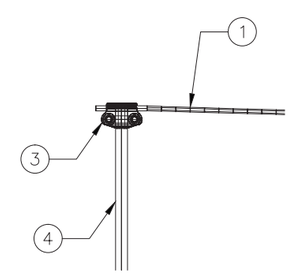

DETAIL 7
SCALE: 3" = 1'-0"
TOWER GROUND ROD ATTACHMENT DETAIL

VER	DATE	VERSION DESCRIPTION	PREPARED BY	REVIEWED BY	APPROVED BY
9	09/10/13	ADDED GROUNDING LUG, CORRECTED VIEW AND SECTION REFERENCES	TEC	KAD	LCS
10	11/25/13	SHEETS 2 & 5, CORRECT MATERIAL ITEM ID FOR GROUNDING LUG	TEC		
11	04/25/14	ADD DETAIL DESCRIPTIONS, ADD HDPE PIPE	TEC	KAD	
12	09/19/14	CLARIFY DETAIL 4 AND CORRECT GROUND ROD CLAMP ITEM ID ON PAGE 2	TEC	BMR	KAD
13	06/23/15	CHANGE WIRE MESH FROM ROLLED TO 5'x6'-0" FLAT MATS, SHEETS 4 & 5	TEC	BMR	KAD
14	01/30/16	UPDATE PROPER CONNECTORS, REMOVE STAPLES, SHEETS 2-6	TEC	BMR	KAD
15	05/04/16	REPLACE GROUNDING LUG WITH 2 HOLE BRONZE TERMINAL CONNECTOR, SP.06.01.301 DETAILS 2-6	TEC	BMR	KAD

VERSION 15

nationalgrid

PREPARED BY	JLC	02/02/10
REVIEWED BY	JME	02/02/10
APPROVED BY	MSB	02/02/10
SCALE	NONE	
SHEET	2 OF 6	
INDEX	SP.06.01.301	

TRANSMISSION LINE STANDARD

GROUNDING DETAILS FOR TRANSMISSION LINE STRUCTURES

PRINTED 5/12/2016 9:24 AM

CONFIDENTIALITY STATEMENT: THIS DOCUMENT CONTAINS CONFIDENTIAL AND PROPRIETARY INFORMATION OF NATIONAL GRID. IT IS TO BE USED BY AUTHORIZED CONTRACTORS FOR NATIONAL GRID SOLELY IN CONNECTION WITH THE SPECIFIC PROJECT FOR WHICH IT HAS BEEN TRANSMITTED. ANY OTHER USE, ITS TRANSMITTAL TO THIRD PARTIES, OR ITS REPRODUCTION WITHOUT PRIOR EXPRESS WRITTEN AUTHORIZATION OF NATIONAL GRID IS STRICTLY PROHIBITED.

PRINTED COPIES ARE NOT DOCUMENT CONTROLLED. FOR THE LATEST AUTHORIZED VERSION PLEASE REFER TO THE ENGINEERING DEPARTMENT DOCUMENTS CABINET IN DOCUMENTUM

INCHES ON ORIGINAL

CONFIDENTIALITY STATEMENT: THIS DOCUMENT CONTAINS CONFIDENTIAL AND PROPRIETARY INFORMATION OF NATIONAL GRID SOLELY IN CONNECTION WITH THE SPECIFIC PROJECT FOR WHICH IT HAS BEEN TRANSMITTED. ANY OTHER USE, ITS TRANSMITTAL TO THIRD PARTIES, OR ITS REPRODUCTION WITHOUT PRIOR EXPRESS WRITTEN AUTHORIZATION OF NATIONAL GRID IS STRICTLY PROHIBITED.

TRANSMISSION STRUCTURE GROUND GRID CONFIGURATION PLAN VIEWS

SINGLE POLE STRUCTURE

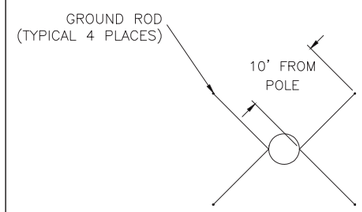

INSTALL 4 GROUND RODS

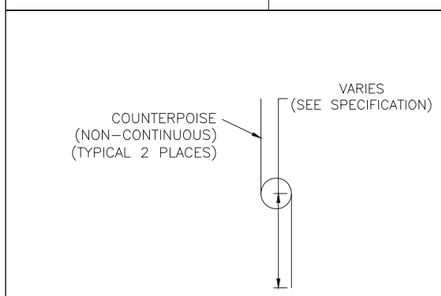

INSTALL 2 STRIPS COUNTERPOISE

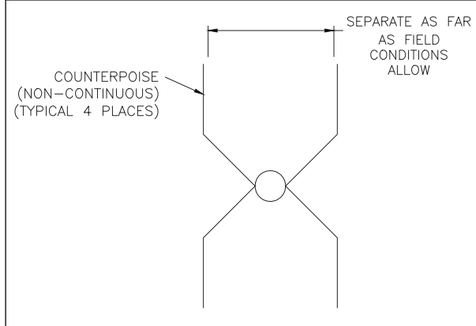

INSTALL 4 STRIPS COUNTERPOISE

TWO POLE STRUCTURE

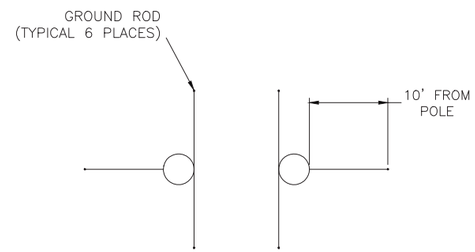

INSTALL 6 GROUND RODS

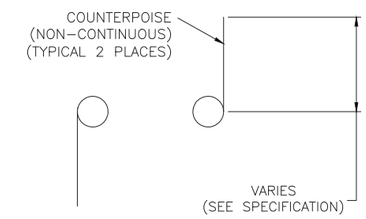

INSTALL 2 STRIPS COUNTERPOISE

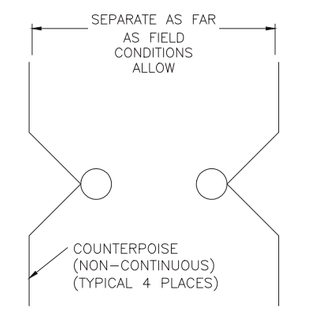

INSTALL 4 STRIPS COUNTERPOISE

THREE POLE STRUCTURE

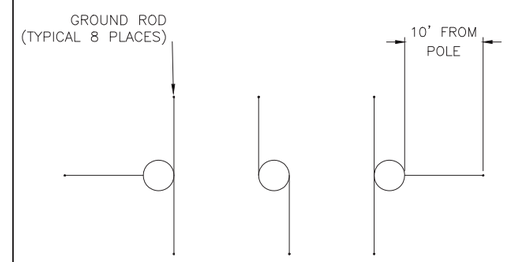

INSTALL 8 GROUND RODS

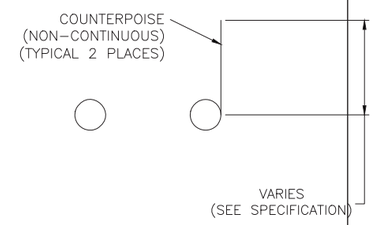

INSTALL 2 STRIPS COUNTERPOISE

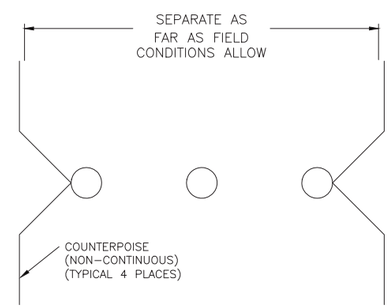

INSTALL 4 STRIPS COUNTERPOISE

VERSION	DATE	VERSION DESCRIPTION	PREPARED/REVISED/APPROVED
9	09/10/13	ADDED GROUNDING LUG, CORRECTED VIEW AND SECTION REFERENCES	TEC KAD LGS
10	11/25/13	SHEETS 2 & 5, CORRECT MATERIAL ITEM ID FOR GROUNDING LUG	TEC
11	04/25/14	ADD DETAIL DESCRIPTIONS, ADD HDPE PIPE	TEC KAD
12	09/19/14	CLARIFY DETAIL 4 AND CORRECT GROUND ROD CLAMP ITEM ID ON PAGE 2	TEC BMR KAD
13	06/23/15	CHANGE WIRE MESH FROM ROLLED TO 5.4 x 6-0 FLAT MATS, SHEETS 4 & 5	TEC BMR KAD
14	11/30/15	ADD ALTERNATE GROUNDING LUG WITH 2 HOLE BRONZE TERMINAL CONNECTOR, SHEETS 2-6	TEC BMR KAD
15	05/04/16	REPLACE GROUNDING LUG WITH 2 HOLE BRONZE TERMINAL CONNECTOR, SPF-777 DETAILS 2-6	TEC BMR KAD

VERSION 15

PRINTED 5/3/2016 1:43 PM

nationalgrid

PREPARED BY	JLC	02/02/10
REVIEWED BY	JME	02/02/10
APPROVED BY	MSB	02/02/10
SCALE	NONE	
SHEET	3 OF 6	
INDEX	SP.06.01.301	

TRANSMISSION LINE STANDARD

GROUNDING DETAILS FOR
TRANSMISSION LINE STRUCTURES

PRINTED COPIES ARE NOT DOCUMENT CONTROLLED. FOR THE LATEST AUTHORIZED VERSION PLEASE REFER TO THE ENGINEERING DEPARTMENT DOCUMENTS CABINET IN DOCUMENTUM

INCHES ON ORIGINAL

CONFIDENTIALITY STATEMENT: THIS DOCUMENT CONTAINS CONFIDENTIAL AND PROPRIETARY INFORMATION OF NATIONAL GRID. IT IS TO BE USED BY AUTHORIZED CONTRACTORS FOR NATIONAL GRID SOLELY IN CONNECTION WITH THE SPECIFIC PROJECT FOR WHICH IT HAS BEEN TRANSMITTED. ANY OTHER USE, ITS TRANSMITTAL TO THIRD PARTIES, OR ITS REPRODUCTION WITHOUT PRIOR EXPRESS WRITTEN AUTHORIZATION OF NATIONAL GRID IS STRICTLY PROHIBITED.

NOTES
1. ALL WOOD POLES SHALL BE INSTALLED IN CORRUGATED METAL PIPES UNLESS STATED OTHERWISE IN THE CONSTRUCTION FIELD ISSUE, OR WHERE APPROVED ON A SITE SPECIFIC BASIS BY THE ENGINEER
2. WHERE WOOD POLES ARE NOT INSTALLED IN CORRUGATED METAL PIPE, THE ALTERNATE GROUNDING CONFIGURATIONS IDENTIFIED IN THIS SHEET SHALL BE USED
3. IF THESE ALTERNATE DETAILS ARE USED, TESTING OF GROUND RESISTANCE SHALL PROCEED AS NORMAL. THE INSTALLER SHALL USE THE SAME PROCEDURE AS FOR POLES INSTALLED IN CORRUGATED METAL PIPES.

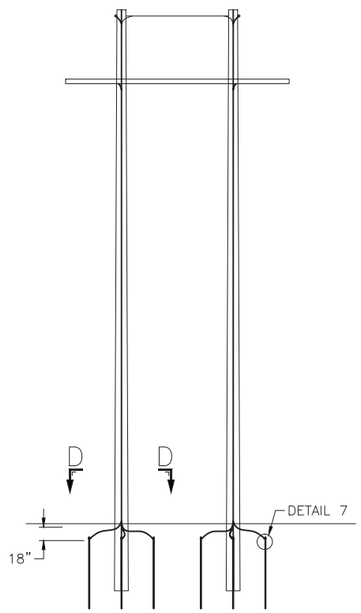

H–FRAME
BONDED CROSSARM

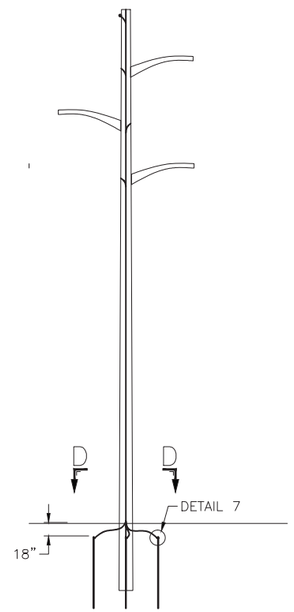

SINGLE POLE

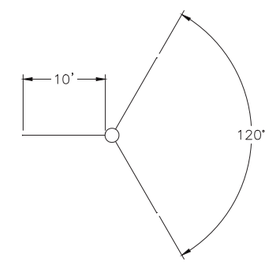

SECTION D–D

SECTION E–E

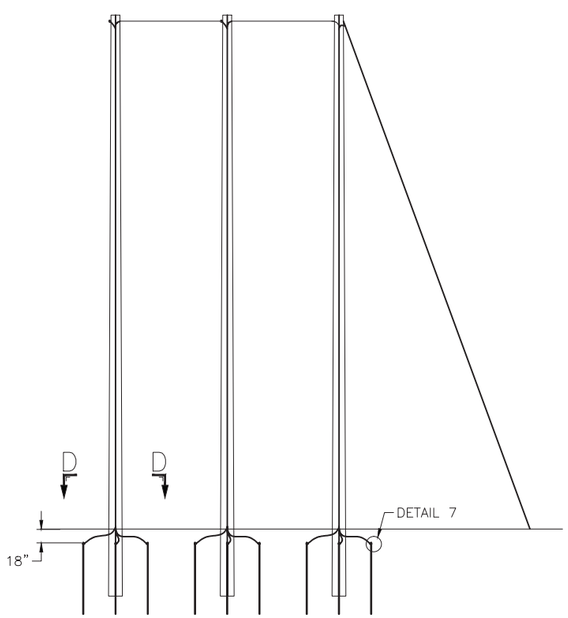

3 POLE STRUCTURE
W/ POLE DOWNLEAD

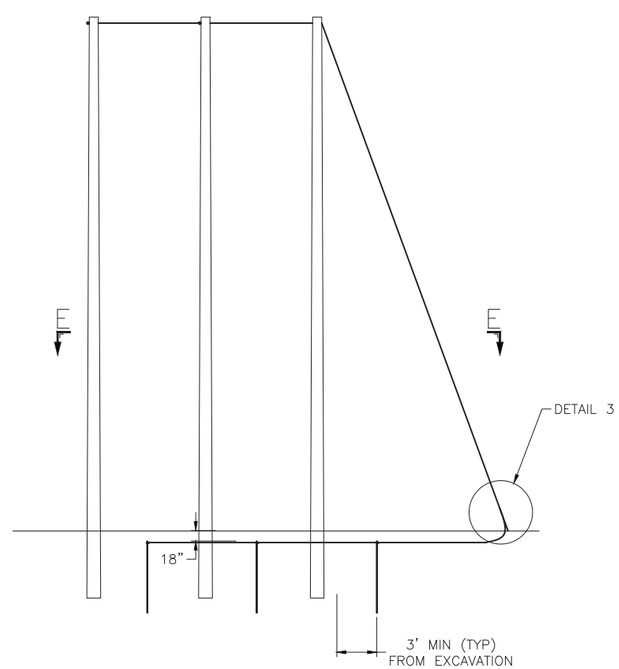

3 POLE STRUCTURE
W/O POLE DOWNLEAD

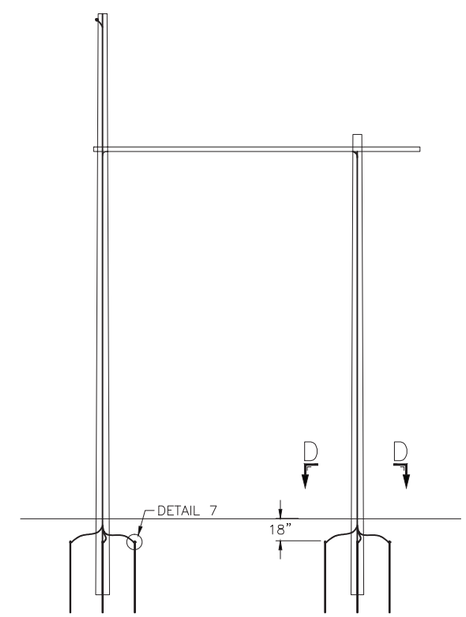

POLARM
BONDED CROSSARM

VER	DATE	VERSION DESCRIPTION	PREPARED	REVIEWED	APPROVED
9	09/10/13	ADDED GROUNDING LUG, CORRECTED VIEW AND SECTION REFERENCES	TEC	KAD	LGS
10	11/25/13	SHEETS 2 & 5, CORRECT MATERIAL ITEM ID FOR GROUNDING LUG	TEC		
11	04/25/14	ADD DETAIL DESCRIPTIONS, ADD HDPE PIPE	TEC	KAD	
12	09/19/14	CLARIFY DETAIL 4 AND CORRECT GROUND ROD CLAMP ITEM ID ON PAGE 2	TEC	BMR	KAD
13	06/23/15	CHANGE WIRE MESH FROM ROLLED TO 5.4x6–0 FLAT MATS, SHEETS 4 & 5	TEC	BMR	KAD
14	11/30/15	ADD ALTERNATE GROUNDING CONFIG. 2 AND 3, REMOVE STANDOFF BRACKET DETAILS P.6	TEC	BMR	KAD
15	05/04/16	REPLACE GROUNDING LUG WITH 2 HOLE BRONZE TERMINAL CONNECTOR, SPE-777	TEC	BMR	KAD

VERSION 15

nationalgrid

TRANSMISSION LINE STANDARD

ALTERNATE GROUNDING DETAILS
INSTALLATIONS WITHOUT STEEL CULVERT

PREPARED BY	JLC	02/02/10
REVIEWED BY	JME	02/02/10
APPROVED BY	MSB	02/02/10
SCALE	NONE	
SHEET	6 OF 6	
INDEX	SP.06.01.301	

PRINTED 5/3/2016 1:42 PM

PRINTED COPIES ARE NOT DOCUMENT CONTROLLED. FOR THE LATEST AUTHORIZED VERSION PLEASE REFER TO THE ENGINEERING DEPARTMENT DOCUMENTS CABINET IN DOCUMENTUM

INCHES ON ORIGINAL

CONFIDENTIALITY STATEMENT: THIS DOCUMENT CONTAINS CONFIDENTIAL AND PROPRIETARY INFORMATION OF NATIONAL GRID. IT IS TO BE USED BY AUTHORIZED CONTRACTORS FOR NATIONAL GRID SOLELY IN CONNECTION WITH THE SPECIFIC PROJECT FOR WHICH IT HAS BEEN TRANSMITTED. ANY OTHER USE, ITS TRANSMITTAL TO THIRD PARTIES, OR ITS REPRODUCTION WITHOUT PRIOR EXPRESS WRITTEN AUTHORIZATION OF NATIONAL GRID IS STRICTLY PROHIBITED.

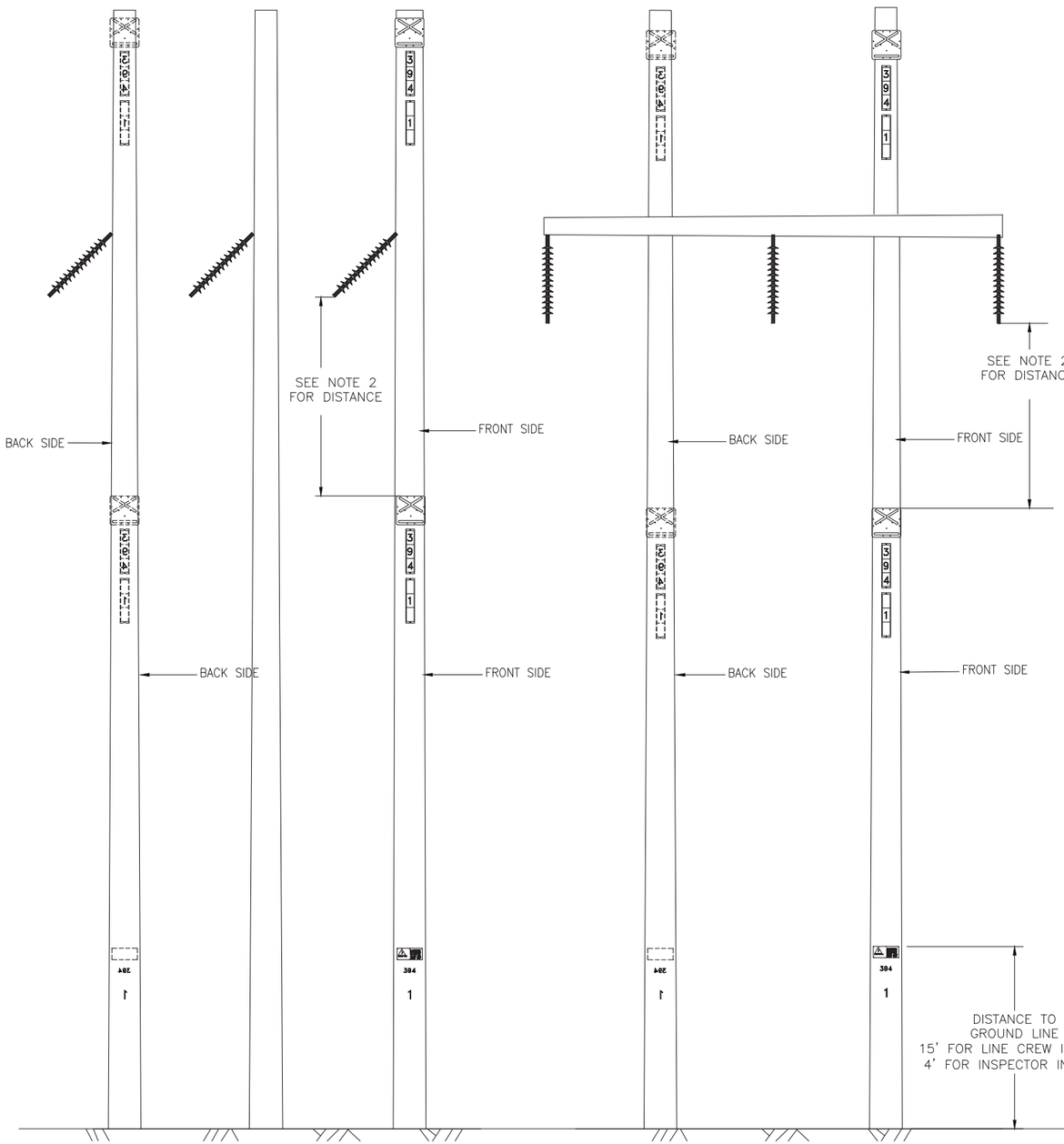

3+ POLE

2 POLE

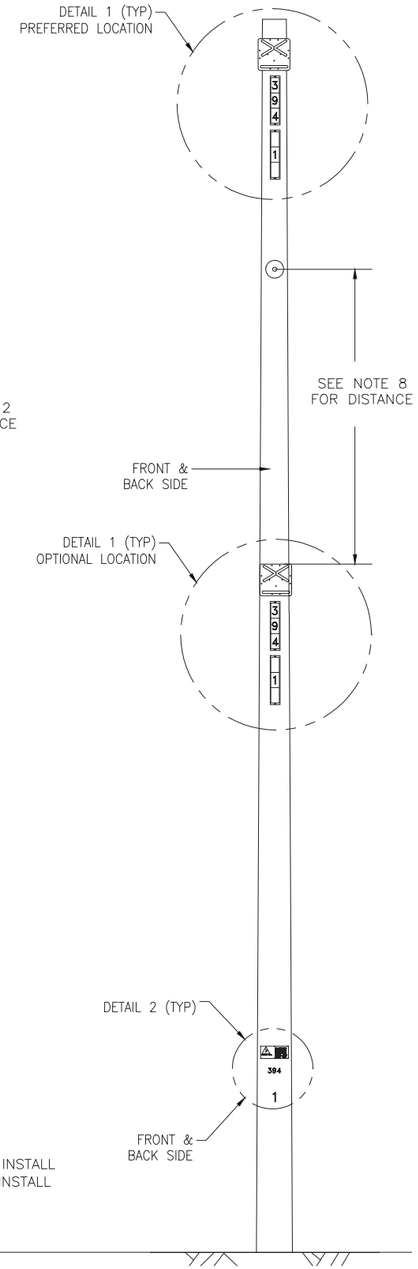

1 POLE

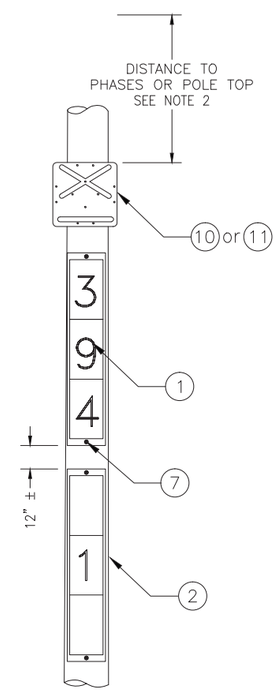

DETAIL 1

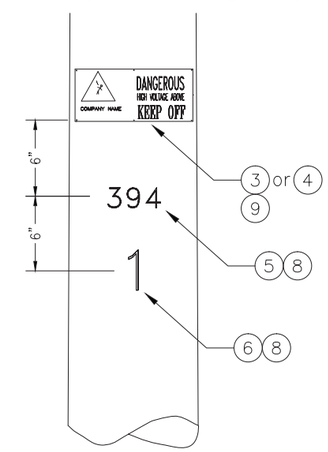

DETAIL 2

MATERIAL LIST			
TAG	DESCRIPTION	PS ITEM ID	SAP ITEM ID
1	6" AERIAL LETTERS	VARIOUS	VARIOUS
2	3 POSITION CHANNEL	5473853	9310510
3	DANGER SIGN, 8"x18"	5483478	9302629
4	DANGER SIGN, (MA ONLY)	5483466	9302632
5	ALUMINUM LINE NUMBERS/LETTERS, 1-1/2"	VARIOUS	VARIOUS
6	ALUMINUM STRUCTURE NUMBERS, 3"	VARIOUS	VARIOUS
7	LAG SCREW, 3/8"x3"	5995685	9307185
8	POLE TAG NAILS	5477145	9309485
9	ROOFING NAILS	5477148	9319740
10	AERIAL CROSSING SIGN, BLACK LETTER ON YELLOW	9387937	9387937
11	AERIAL CROSSING SIGN, WHITE LETTER ON RED	9387936	9387936

NOTES:

1. AERIAL WARNING SIGNS ARE REQUIRED FOR CONDITIONS SHOWN ON SHEET 4.
2. IT IS PREFERRED TO INSTALL AERIAL WARNING SIGNS AND AERIAL STRUCTURE NUMBERS AT THE TOP MOST PORTIONS OF STRUCTURES. WHEN THIS IS NOT PRACTICAL DUE TO LINE OUTAGES OR OTHER FACTORS, AERIAL WARNING SIGNS MAY BE INSTALLED BELOW THE PHASES PROVIDED SIGN VISIBILITY IS CONSIDERED ADEQUATE AND WITH ENGINEERING APPROVAL. THE FOLLOWING DISTANCES SHALL BE MAINTAINED WITH BELOW PHASE INSTALLATIONS:

   UP TO 34.5kV = 10 FEET
   46kV TO 69kV = 10 FEET 8 INCHES
   115kV = 12 FEET 4 INCHES
   230kV = 16 FEET
   345kV = 20 FEET

3. AERIAL STRUCTURE NUMBERS ARE TO BE INSTALLED ON EVERY STRUCTURE WITH NUMBER ENDING IN "0" (i.e. 10, 20, 30 etc), THE FIRST AND LAST STRUCTURES OF THE LINE OR TAP, AT STRUCTURES EITHER SIDE OF A TAP LINE AND AT STRUCTURES ON BOTH SIDES OF ROAD CROSSINGS (STRUCTURES AT ROAD CROSSINGS SHALL HAVE AERIAL SIGNAGE ON BOTH SIDES OF THE STRUCTURE).
4. AERIAL STRUCTURE NUMBER CHANNELS SHALL BE CRIMPED AT THE TOP AND BOTTOM TO PREVENT THE NUMBER TILES FROM BECOMING DISLODGED.
5. AERIAL LINE NUMBERS SHALL BE INSTALLED ON BOTH SIDES OF THE FIRST AND LAST STRUCTURES OF THE LINE OR TAP
6. WARNING SIGNS SHALL BE INSTALLED ON BOTH SIDES OF EVERY STRUCTURE. THEY SHALL BE ATTACHED AS HIGH AS PRACTICAL, BUT NO MORE THAN 15'±.
7. GROUNDLINE STRUCTURE AND LINE NUMBERS SHALL BE INSTALLED ON BOTH SIDES OF THE STRUCTURE. THE HEIGHT ABOVE GRADE SHALL BE 15 FEET FOR CONSTRUCTION CREW INSTALLATIONS AND 4 FEET ABOVE GRADE FOR LINE INSPECTOR INSTALLATIONS.
8. LINE AND STRUCTURE NUMBERS FOR BOTH CIRCUITS OF A DOUBLE CIRCUIT LINE SHALL BE INSTALLED
9. INSTALL SIGNAGE NEATLY, CENTERED AND LEVEL
10. REFER TO ML.06.01.002 FOR NUMBER AND LETTER ITEM IDS

VER	DATE	VERSION DESCRIPTION	PREPARED	REVIEWED	APPROVED
6	09/04/14	CORRECT SPELLING ERROR IN DESCRIPTION FOR ITEM TAGS 10 & 11	TEC	DWW	
7	09/08/14	CORRECT LINE # AND STR # ORIENTATION ON POLES, ADD BAND AND BRACKET DETAIL p.3	TEC	DWW	BMR
8	09/19/14	CORRECT ITEM ID FOR SIGN BLACK LETTER ON YELLOW, CHANGE NOTE 3	TEC	DWW	BMR
9	01/22/15	REVISE NOTE 5, STANDARD PROBLEM LOG ENTRY 234	TEC	DWW	BMR
10	06/29/15	ADD NOTE 4	TEC	DWW	BMR
11	08/26/15	ADD WARNING SIGN AND AREAL MARKER ORIENTATION DETAIL VIEWS, SHEET 4	TEC	DWW	BMR
12	05/05/16	ADD PROPER SAP ITEM ID NUMBERS TO MATERIAL LISTS, PROBLEM LOG ENTRY 274	TEC	DWW	BMR

VERSION 12

PRINTED 5/5/2016 1:30 PM

nationalgrid

PREPARED BY	JLC	02/02/10
REVIEWED BY	JME	02/02/10
APPROVED BY	MSB	02/02/10
SCALE	NONE	
SHEET	2 OF 4	
INDEX	SP.06.01.301	

TRANSMISSION LINE STANDARD

WOOD POLE SIGNAGE

PRINTED COPIES ARE NOT DOCUMENT CONTROLLED. FOR THE LATEST AUTHORIZED VERSION PLEASE REFER TO THE ENGINEERING DEPARTMENT DOCUMENTS CABINET IN DOCUMENTUM

INCHES ON ORIGINAL

CONFIDENTIALITY STATEMENT: THIS DOCUMENT CONTAINS CONFIDENTIAL AND PROPRIETARY INFORMATION OF NATIONAL GRID. IT IS TO BE USED BY AUTHORIZED CONTRACTORS FOR NATIONAL GRID SOLELY IN CONNECTION WITH THE SPECIFIC PROJECT FOR WHICH IT HAS BEEN TRANSMITTED. ANY OTHER USE, ITS TRANSMITTAL TO THIRD PARTIES, OR ITS REPRODUCTION WITHOUT PRIOR EXPRESS WRITTEN AUTHORIZATION OF NATIONAL GRID IS STRICTLY PROHIBITED.

ORIENTATION OF HAZARD WARNING SIGNS AND AERIAL MARKERS

NOTE:
APPLY 5 SIGNS WITHIN A ½ MILE RADIUS OF CROSSING HAZARDS. WHEN LINES HAVE MORE THAN 5 STRUCTURES WITHIN A ½ MILE RADIUS OF CROSSING, SIGNS SHALL BE PLACES AS EVENLY AS POSSIBLE. 4 YELLOW SIGNS AND 1 RED SIGN. RED SIGNS SHALL BE PLACED ON THE LAST STRUCTURE BEFORE THE HAZARD.

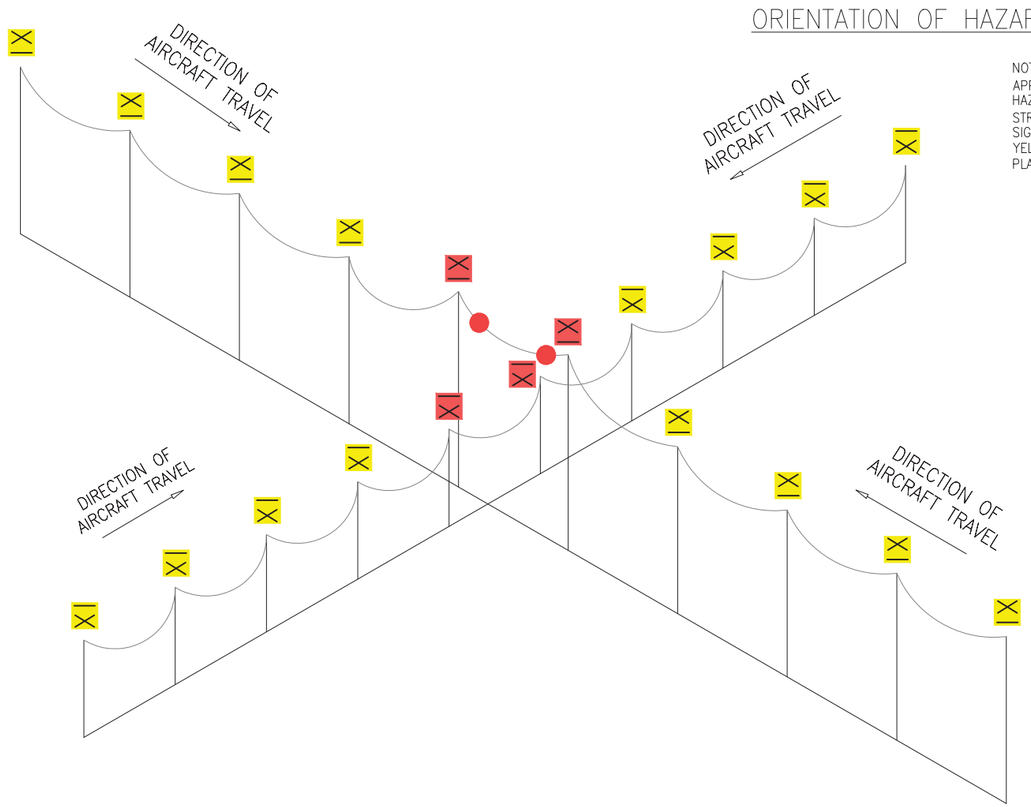

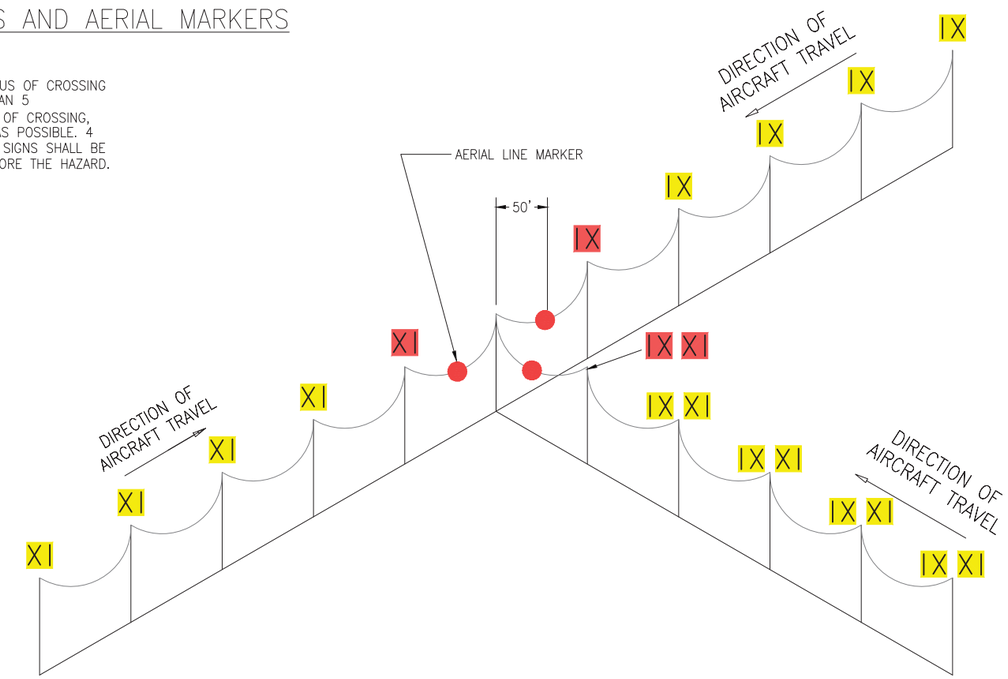

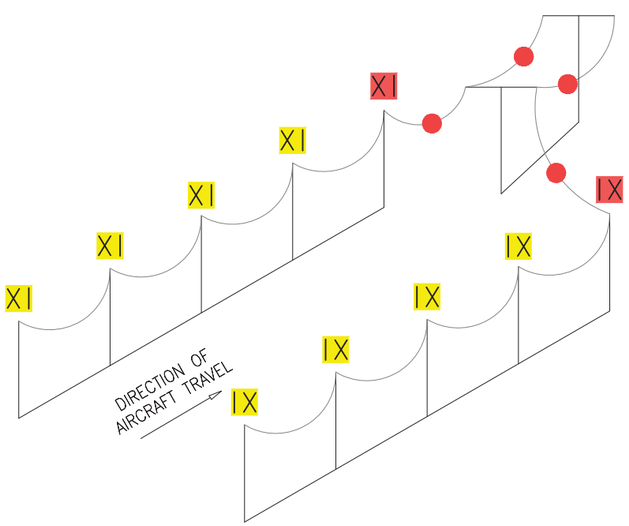

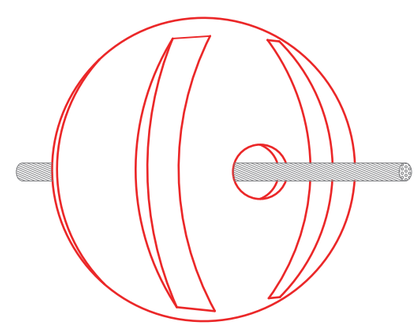

AERIAL LINE MARKER

1. AERIAL LINE MARKERS SHALL GE INSTALLED ON ALL SHIELDWIRES OF UPPER LINE CROSSINGS AND ON SHIELDWIRES OF CONVERGING LINES.
2. MARKERS SHALL BE SPACED A MINIMUM OF 100' APART AND 100' FROM STRUCTURES. A MINIMUM OF 2 MARKERS SHALL BE USED FOR EACH SPAN.
3. AT STRUCTURE LOCATIONS WITH CONVERGING LINES, MARKER BALLS SHALL BE POSITIONED ON ALL SHIELDWIRES AT A DISTANCE OF 50' FROM THE JUNCTION STRUCTURE.
4. SEE GL.06.01.112 FOR LINE MARKER INSTALLATION GUIDELINES

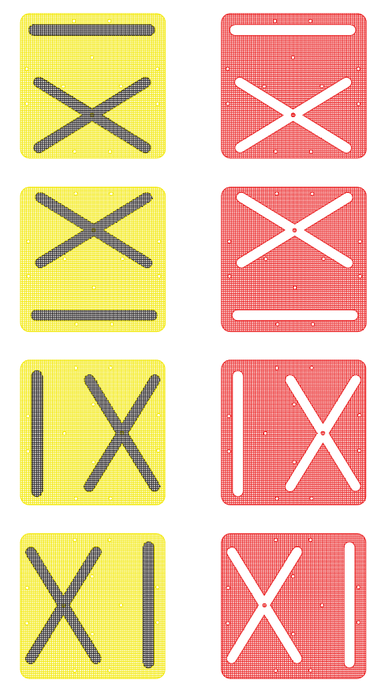

PRIMARY WARNING SIGN

LAST WARNING SIGN BEFORE HAZARD

USED TO INDICATE THAT THE UPCOMING CROSSING LINE GOES OVER THE PATROLLED LINE.

USED TO INDICATE THAT THE UPCOMING CROSSING LINE GOES UNDER THE PATROLLED LINE.

INDICATES THAT A TAP IS UPCOMING OR A SECOND CIRCUIT IS CONVERGING TO THE LEFT OF THE PATROLLED LINE.

INDICATES THAT A TAP IS UPCOMING OR A SECOND CIRCUIT IS CONVERGING TO THE RIGHT OF THE PATROLLED LINE.

VER	DATE	VERSION DESCRIPTION	PREPARED	REVIEWED	APPROVED
6	09/04/14	CORRECT SPELLING ERROR IN DESCRIPTION FOR ITEM TAGS 10 & 11	TEC	DWW	
7	09/08/14	CORRECT LINE # AND STR # ORIENTATION ON POLES, ADD BAND AND BRACKET DETAIL p.3	TEC	DWW	BMR
8	09/19/14	CORRECT ITEM ID FOR SIGN BLACK LETTER ON YELLOW, CHANGE NOTE 3	TEC	DWW	BMR
9	01/22/15	REVISE NOTE 5, STANDARD PROBLEM LOG ENTRY 234	TEC	DWW	BMR
10	06/29/15	ADD NOTE 4	TEC	DWW	BMR
11	08/26/15	ADD WARNING SIGN AND AREAL MARKER ORIENTATION DETAIL VIEWS, SHEET 4	TEC	DWW	BMR
12	05/05/16	ADD PROPLIS SOFT ITEM ID NUMBERS TO MATERIAL LISTS, PROBLEM LOG ENTRY 274	TEC	DWW	BMR

VERSION 12

nationalgrid

PREPARED BY	JLC	02/02/10
REVIEWED BY	JME	02/02/10
APPROVED BY	MSB	02/02/10
SCALE	NONE	
SHEET	4 OF 4	
INDEX	SP.06.01.301	

TRANSMISSION LINE STANDARD

HELICOPTER PATROL WARNING SIGNS

PRINTED 5/5/2016 1:27 PM

PRINTED COPIES ARE NOT DOCUMENT CONTROLLED. FOR THE LATEST AUTHORIZED VERSION PLEASE REFER TO THE ENGINEERING DEPARTMENT DOCUMENTS CABINET IN DOCUMENTUM

INCHES ON ORIGINAL

SP.06.01.301.401

CONFIDENTIALITY STATEMENT: THIS DOCUMENT CONTAINS CONFIDENTIAL AND PROPRIETARY INFORMATION OF NATIONAL GRID. IT IS TO BE USED BY AUTHORIZED CONTRACTORS FOR NATIONAL GRID SOLELY IN CONNECTION WITH THE SPECIFIC PROJECT FOR WHICH IT HAS BEEN TRANSMITTED. ANY OTHER USE, ITS TRANSMITTAL TO THIRD PARTIES, OR ITS REPRODUCTION WITHOUT PRIOR EXPRESS WRITTEN AUTHORIZATION OF NATIONAL GRID IS STRICTLY PROHIBITED.

MATERIAL LIST

ITEM	QUANTITY OPT 1	QUANTITY OPT 2	DESCRIPTION	PS ITEM ID	SAP ITEM ID
1	1	1	12 GA. CORRUGATED STEEL PIPE	PO	PO
2	1	–	HDPE PIPE, 42" DIAMETER	PO	PO

NOTES:
1. SEE DRAWING SP.06.01.301.101 FOR GROUNDING DETAILS.
2. MAINTAIN 3" TO 8" SPACING BETWEEN POLE AND CORRUGATED STEEL PILE. CORRUGATED STEEL PIPE LENGTHS "L" ARE TO BE USED SUCH THAT THEY ARE BURIED AT LEAST AS DEEP AS POLES. BACKFILL INSIDE CORRUGATED STEEL PIPE AS NECESSARY TO ACHIEVE PROPER POLE EMBEDMENT DEPTH. FOR STEEL POLES, "L" AND "D" ARE SPECIFIED BY THE DESIGNER
3. TOP EDGE OF CORRUGATED STEEL PIPE SHALL BE BURIED A MINIMUM OF 18 INCHES BELOW GRADE FOR WOOD POLES. BACKFILL STONE SHALL BE MOUNDED ABOVE GROUNDLINE
4. WHERE CORRUGATED STEEL PIPES ARE INSTALLED IN ADVANCE OF POLE INSTALLATION, HOLE IS TO BE COVERED AND SECURED IN A METHOD ACCEPTABLE TO NATIONAL GRID
5. HDPE PIPE IS ORDERED IN 20' LENGTHS. PIPE SHALL BE FIELD CUT TO 2' INCREMENTS.

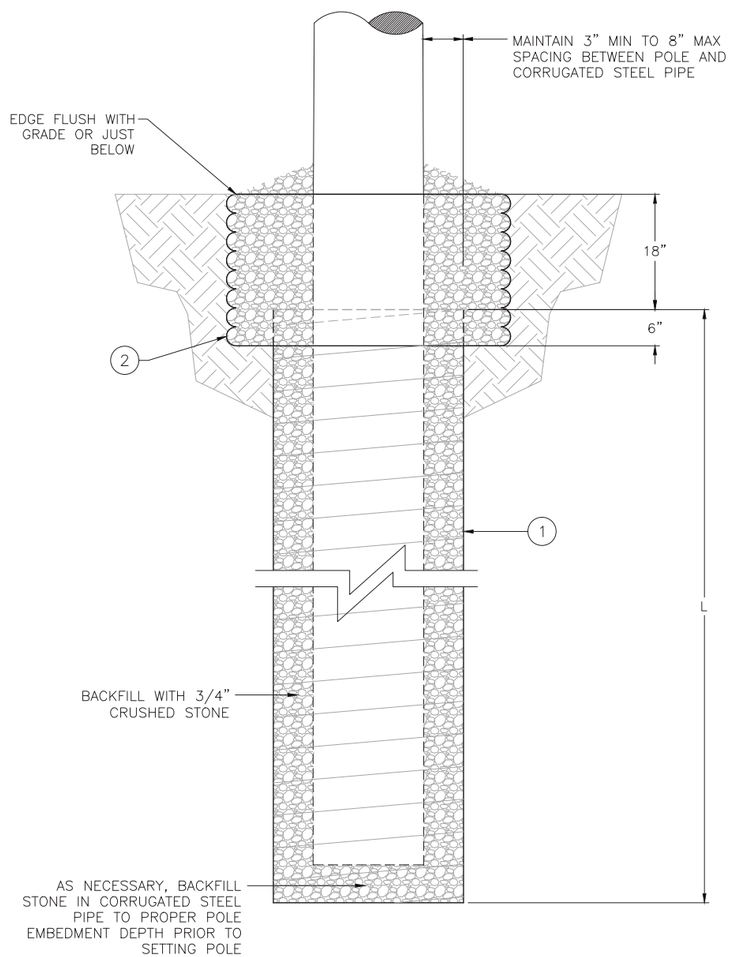

OPTION 1
SCALE: 1" = 1'-0"

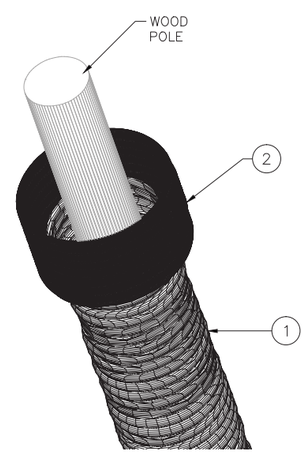

ISOMETRIC VIEW
SHOWING ORIENTATION OF WOOD POLE, CURROGATED STEEL PIPE AND HDPE PIPE

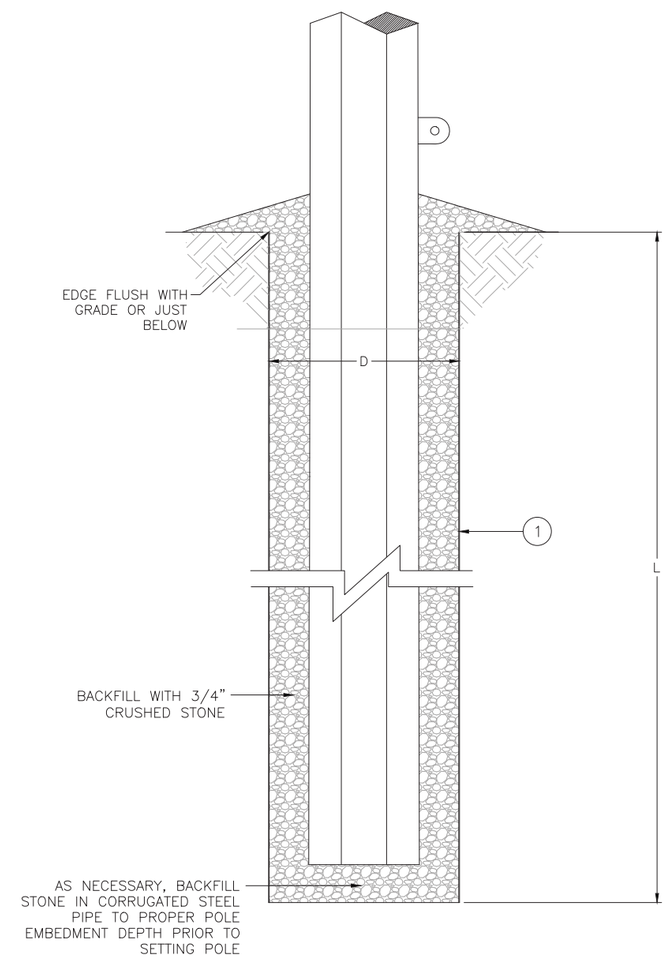

OPTION 2
SCALE: 1" = 1'-0"
STEEL POLE

VER	DATE	VERSION DESCRIPTION	PREPARED	REVIEWED	APPROVED
1	02/02/10	02/09/95 REISSUED AS SP.06.01.301.401; 02/09/95 SUPERSEDED	JLC		
2	03/31/11	REQUIRE EDGE OF CULVERT 18" BELOW GRADE FOR WOOD; D-11679 SUPERSEDED BY SP.06.01.301.101	JLC		
3	07/09/12	ADD SAP ITEM ID NUMBERS	SLB		MSB
4	02/07/13	VARIOUS MINOR CORRECTIONS	KAD	SAM	MSB
5	03/24/14	REMOVE GROUNDING DETAILS FROM WOOD POLE DETAILS, ADD USE HDPE PIPE	TEC	KAD	
6	01/13/15	REMOVED UNNEEDED DIMENSION FOR OPTION 2 DETAIL	TEC	KAD	

VERSION

nationalgrid

PREPARED BY	JLC	2/4/10
REVIEWED BY		
APPROVED BY		
SCALE	NTS	
SHEET	1 OF 1	
INDEX		

TRANSMISSION STANDARD

DETAILS FOR INSTALLATION OF WOOD AND STEEL POLES IN CORRUGATED PIPES

PRINTED COPIES ARE NOT DOCUMENT CONTROLLED. FOR THE LATEST AUTHORIZED VERSION PLEASE REFER TO THE ENGINEERING DEPARTMENT DOCUMENTS CABINET IN DOCUMENTUM

PRINTED 1/13/2015 8:36 AM

INCHES ON ORIGINAL

CONFIDENTIALITY STATEMENT: THIS DOCUMENT CONTAINS CONFIDENTIAL AND PROPRIETARY INFORMATION OF NATIONAL GRID. IT IS TO BE USED BY AUTHORIZED CONTRACTORS FOR NATIONAL GRID SOLELY IN CONNECTION WITH THE SPECIFIC PROJECT FOR WHICH IT HAS BEEN TRANSMITTED. ANY OTHER USE, ITS TRANSMITTAL TO THIRD PARTIES, OR ITS REPRODUCTION WITHOUT PRIOR EXPRESS WRITTEN AUTHORIZATION OF NATIONAL GRID IS STRICTLY PROHIBITED.

VER	DATE	VERSION DESCRIPTION	PREPARED	REVIEWED	APPROVED	VERSION
5	05/27/14	CORRECT MINIMUM DEPTH DIMENSION FOR MANTA ANCHOR, PAGE 3	TEC			
6	03/12/15	CORRECT ITEM ID #'s, TAGS 8&9, SHEET 1, PROBLEM LOG ENTRY 248	TEC	BMR	JBS	8
7	08/06/15	ADD 39-1/2" SCREW ANCHOR EXTENSION, SHEET 4, PROBLEM LOG ENTRY 253	TEC			
8	09/01/15	REMOVE 8" HELIX ANCHOR, DISCONTINUED INVENTORY ITEM, LOG ENTRY 256	TEC	JBS		

MATERIAL LIST – HELIX SCREW ANCHOR ASSEMBLY

TAG	QUAN	DESCRIPTION	PS ITEM ID	SAP ITEM ID
1	1	Eyenut, Tripleye, Galv	3503227	9311875
2	1	Anchor, Rod 1"ø x 7'-0"	3503217	9313700
3	1	Anchor, Helix, Screw, 10"ø	3503608	9313466
		Extension, Screw Anchor 42" w/ Coupling	3503215	9313701
		Anchor, Helix, Screw 14"ø	3503609	9314918
		Anchor, Screw, Power Installed, Triple Chance	0809751	9315152
		Guy Adapter, Tripleye, 17"	0809755	9315149
		Tool Adapter, Drive End Assembly	0809754	9315150
		Screw Anchor Extension, Square, 39-1/2"	0809752	9314910

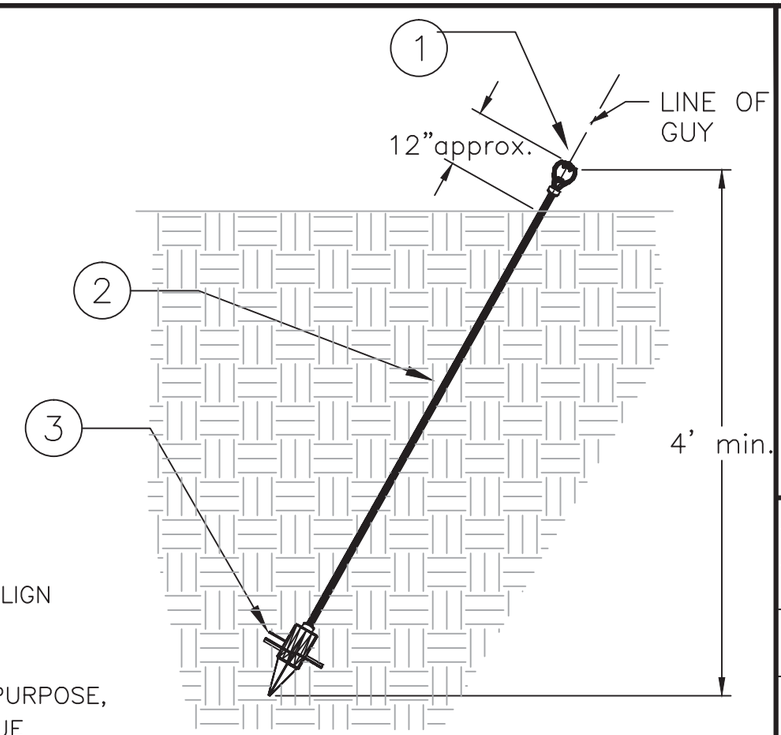

HELIX SCREW ANCHOR ASSEMBLY
SCALE: 1/2"=1'-0"

NOTES:

1. ANCHORS SHALL BE INSTALLED SO THAT THE ANCHOR ROD ALIGNS WITH THE GUY WIRE, WITH A TOLERANCE OF +/- 5°. WHERE MULTIPLE GUY WIRES USE THE SAME ANCHOR, THE ROD SHALL ALIGN WITH THE HIGHEST GUY WIRE.
2. INDIVIDUAL ANCHORS SHALL BE SEPARATED FROM EACH OTHER BY A MINIMUM OF 4 FEET.
3. SCREW ANCHORS SHALL BE INSTALLED WITH POWER EQUIPMENT DESIGNED AND RATED FOR THIS PURPOSE, SUCH AS A DIGGER TRUCK. INSTALLATIONS SHALL USE A DRIVE ASSEMBLY THAT TRANSFERS TORQUE DIRECTLY TO THE ANCHOR HUB; AT NO POINT SHALL THE INSTALLATION APPLY TORQUE TO THE ANCHOR ROD.
4. SCREW ANCHOR ASSEMBLIES SHALL BE DRIVEN IN LINE WITH THE ALIGNMENT OF THE GUY WIRE. ADJUSTMENTS TO ENSURE PROPER ALIGNMENT SHOULD BE MADE IMMEDIATELY AFTER THE FIRST HELIX OF THE ASSEMBLY HAS PENETRATED THE EARTH. THE ANCHOR SHALL BE DRIVEN TO A MINIMUM VERTICAL DEPTH OF 4 FEET AND A MINIMUM OF 6 FEET EMBEDMENT ALONG THE LENGTH OF THE ROD. THE MAXIMUM ALLOWABLE LENGTH OF ANCHOR ROD IS 14 FEET.
5. TO ACHIEVE MAXIMUM HOLDING CAPACITY, THE INSTALLATION TORQUE SHOULD APPROACH 5,500 FT-LBS. THE INSTALLER SHALL OBSERVE AND RECORD THE INSTALLATION TORQUE, WHICH SHALL BE THE AVERAGE TORQUE APPLIED OVER THE LAST TWO FEET OF INSTALLATION. THE INSTALLER SHALL NOTIFY THE DESIGNER IF A LOWER CAPACITY IS ACHIEVED. INSTALLATION TORQUE CAN BE CORRELATED TO PREDICTED CAPACITY USING THE CHART BELOW.

DESC.	PART NUMBER	INSTALLATION TORQUE (FT. LBS.)								
		1,500	2,000	2,500	3,000	3,500	4,000	4,500	5,000	5,500
10" HELIX	CHANCE C102-5201	12.5M	15M	18M	21.5M	24.5M	27.5M	30M	34M	37.5M
14" HELIX	CHANCE C102-5203	15M	18M	21M	24M	27M	30M	33M	36M	38.5M
8" - 10" - 12" COMBINATION	CHANCE 012642-AEJ	19M	25M	31M	38M	44M	50M	56M	62M	68M

nationalgrid

PREPARED BY	TEC	09/02/10
REVIEWED BY	JLC	09/02/10
APPROVED BY	MSB	09/21/10
SCALE	1/2" = 1'-0"	
SHEET	4 OF 4	
INDEX		

STANDARD ANCHOR DETAILS

SCREW-TYPE ANCHOR

PRINTED COPIES ARE NOT DOCUMENT CONTROLLED. FOR THE LATEST AUTHORIZED VERSION PLEASE REFER TO THE ENGINEERING DEPARTMENT DOCUMENTS CABINET IN DOCUMENTUM PRINTED 9/1/2015 10:05 AM

INCHES ON ORIGINAL

SP.06.01.301.402

SP.06.01.301.402

CONFIDENTIALITY STATEMENT: THIS DOCUMENT CONTAINS CONFIDENTIAL AND PROPRIETARY INFORMATION OF NATIONAL GRID. IT IS TO BE USED BY AUTHORIZED CONTRACTORS FOR NATIONAL GRID SOLELY IN CONNECTION WITH THE SPECIFIC PROJECT FOR WHICH IT HAS BEEN TRANSMITTED. ANY OTHER USE, ITS TRANSMITTAL TO THIRD PARTIES, OR ITS REPRODUCTION WITHOUT PRIOR EXPRESS WRITTEN AUTHORIZATION OF NATIONAL GRID IS STRICTLY PROHIBITED.

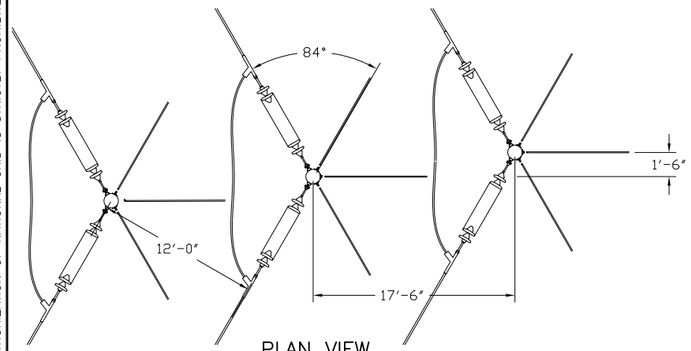

PLAN VIEW

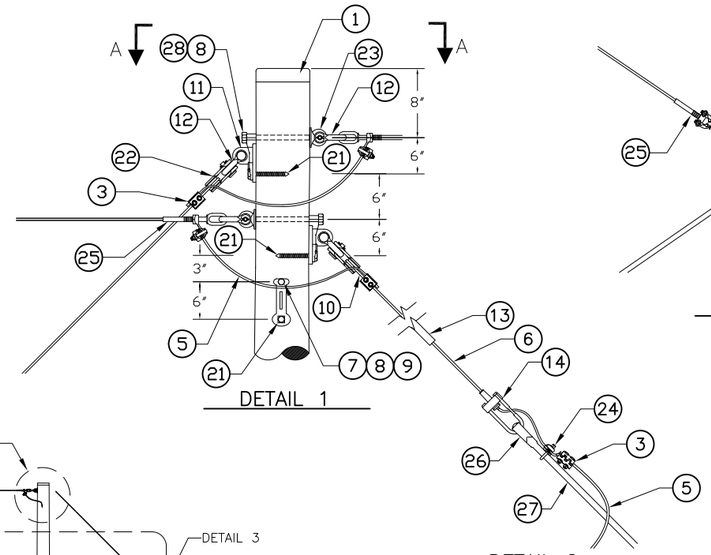

DETAIL 1

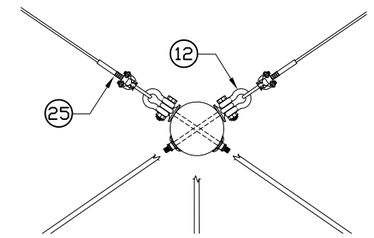

SECTION A–A

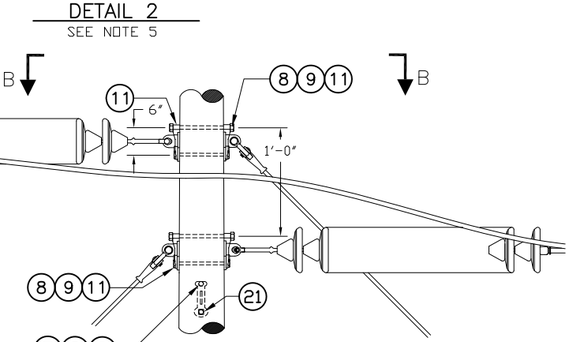

DETAIL 3

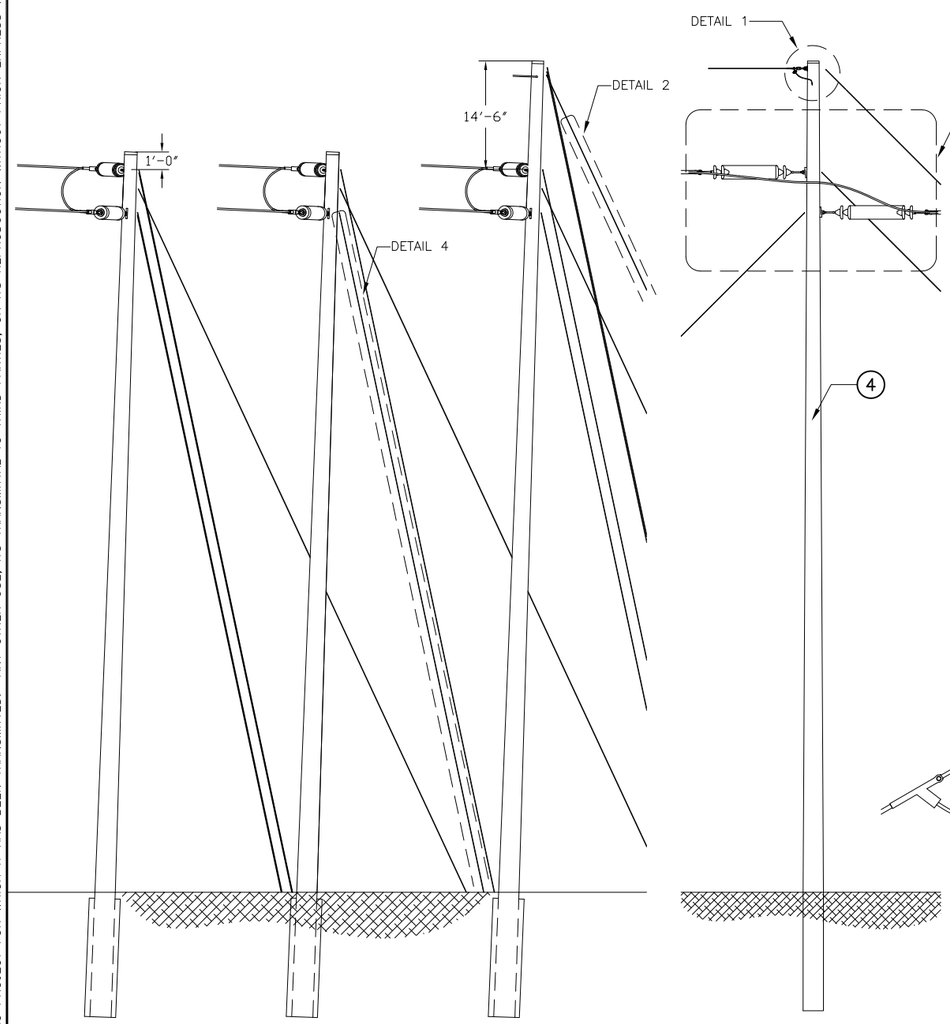

FRONT ELEVATION

SIDE ELEVATION

DETAIL 2
SEE NOTE 5

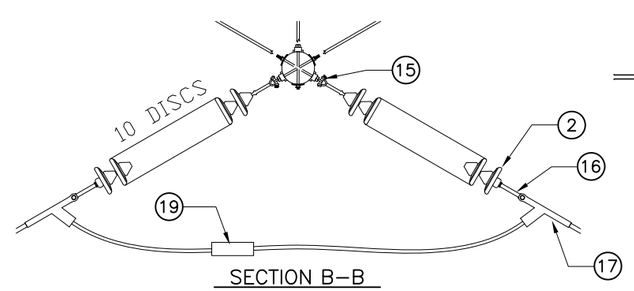

SECTION B–B

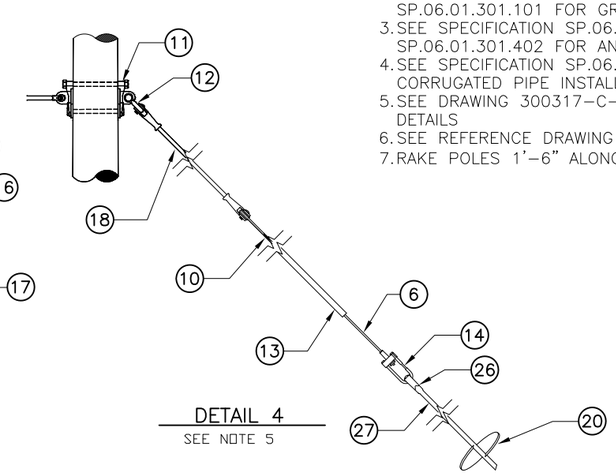

DETAIL 4
SEE NOTE 5

MATERIAL LIST			
TAG	QUAN	DESCRIPTION	PART ID
1	3	POLE TOPPER	9307970
2	60	INSULATOR, PORCELAIN DISC, 20K BROWN	9311629
3	5	PARALLEL GROOVE CLAMP	9320568
4	3	WOOD POLE, SYP	SEE POLE SCHED.
5	250'	WIRE, 3/8" STEEL , COMMON GRADE	9306353
6	1200'	WIRE, 19#9 ALUMOWELD	9306396
7	4	WASHER, SQ. CURVED, 4"X4" FOR 3/4"	9320428
8	18	LOCKNUT, 3/4"	9322023
9	16	BOLT, MACHINE, 3/4"	9319XXX
10	12	GUY GRIP, 19#9 ALUMOWELD	9307193
11	18	POLE EYE PLATE, 36K	9307178
12	14	ANCHOR SHACKLE, 60K	9307404
13	12	MARKER, YELLOW GUY	9313584
14	12	ADJUSTABLE, 19#9 ALUMOWELD GRIP	9306556
15	6	HOT LINE Y-CLEVIS BALL	9312243
16	6	HOT LINE SOCKET EYE, 1 1/16" EYE	9305994
17	6	DEADEND, QUADRANT CLAMP, ALUMINUM, 0.70"-1.42"	9320354
18	9	INSULATOR, FIBERGLASS STRAIN, 78"	9307240
19	3	CONNECTOR, WEDGE TAP	9314714
20	12	14" HELIX ANCHOR	9314918
21	6	5/8" LAG SCREW	9307177
22	3	THIMBLE CLEVIS	9307311
23	2	SHOULDER EYE BOLT, 3/4"	9320620
24	3	ANCHOR ROD GROUND CLAMP	9320250
25	2	CLAMP, COMPRESSION, 3/8" STEEL SW	9306572
26	12	ANCHOR THIMBLE TRIPLE EYE NUT	9311875
27	12	ANCHOR ROD	9313700
28	2	NUT, SQUARE, 3/4"	9307167

WOOD POLE SCHEDULE			
STR. #	QTY	DESCRIPTION	PART ID
2	1	90/CL1	9311451
2	2	75/CL1	9315025

1. SEE SPECIFICATION SP.06.01.301 AND DRAWING SP.06.01.301.201 FOR SIGNAGE REQUIREMENTS.
2. SEE SPECIFICATION SP.06.01.301 AND DRAWING SP.06.01.301.101 FOR GROUNDING DETAILS.
3. SEE SPECIFICATION SP.06.01.301 AND DRAWING SP.06.01.301.402 FOR ANCHOR DETAILS
4. SEE SPECIFICATION SP.06.01.301.401 FOR CORRUGATED PIPE INSTALLATION
5. SEE DRAWING 300317-C-K-1 FOR STAKING DETAILS
6. SEE REFERENCE DRAWING H1.WD.D3.OA
7. RAKE POLES 1'-6" ALONG SPLIT OFF ANGLE

VER.	DATE	REVISION DESCRIPTION	DRWN CHKD APPVD	VERSION
1				0
2				
3				
4				
5				
6				
7				

nationalgrid

	NAME	DATE
ORIGINAL		
DRAWN	TRC	07/27/16
CHECKED	TRC	07/27/16
REVIEWED	TRC	07/27/16
APPROVED	NMM	07/27/16

115 KV T5890
SINGLE SHIELDWIRE (H1)
WOOD (WD)
3-POLE DEADEND (D3)
OUTSIDE ANGLE SHIELDWIRE (OA)

PRINTED 8/4/2016 1:40 PM

PRINTED COPIES ARE NOT DOCUMENT CONTROLLED. FOR THE LATEST AUTHORIZED VERSION PLEASE REFER TO THE ENGINEERING DEPARTMENT DOCUMENTS CABINET IN DOCUMENTUM

NTS

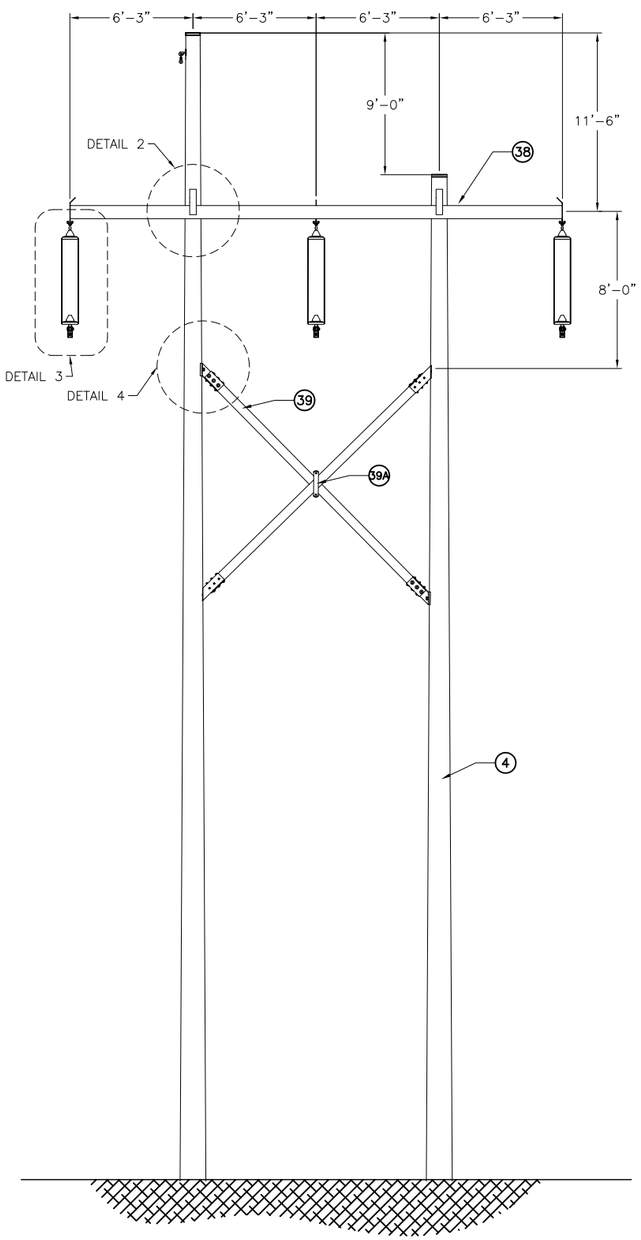

FRONT ELEVATION

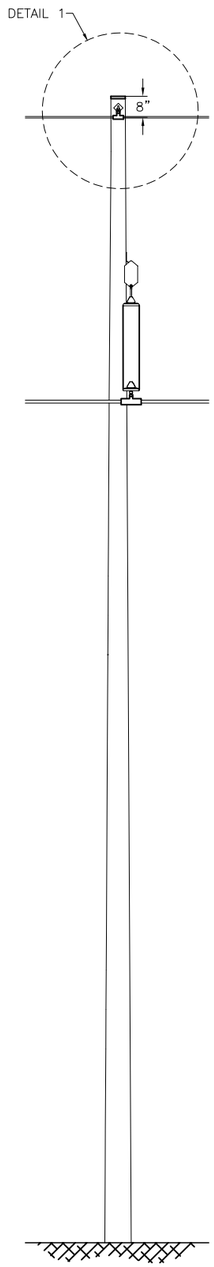

SIDE ELEVATION

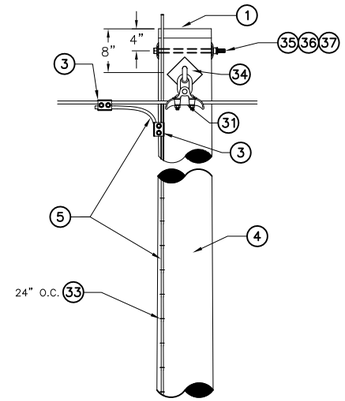

DETAIL 1

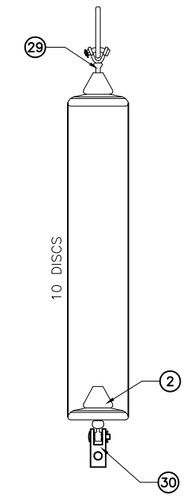

DETAIL 3

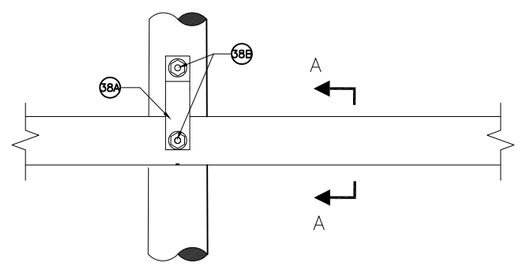

DETAIL 2

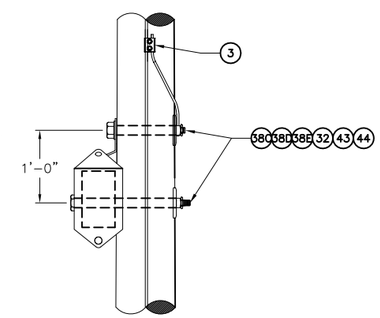

SECTION A-A

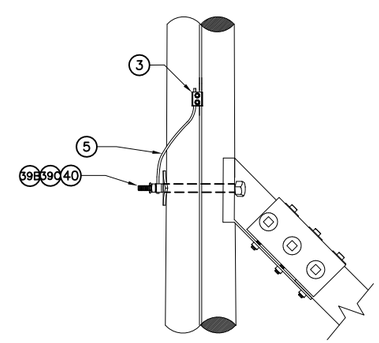

DETAIL 4

1. SEE SPECIFICATION SP.06.01.301 AND DRAWING SP.06.01.301.201 FOR SIGNAGE REQUIREMENTS.
2. SEE SPECIFICATION SP.06.01.301 AND DRAWING SP.06.01.301.101 FOR GROUNDING DETAILS.
3. SEE REFERENCE DRAWING H1.WD.SU.

MATERIAL LIST

TAG	QUAN	DESCRIPTION	PART ID
1	2	POLE TOPPER	9307970
2	30	INSULATOR, PORCELAIN DISC, 20K BWN	9311629
3	5	PARALLEL GROOVE CLAMP	9320568
4	2	POLE, WOOD, SYP	SEE POLE SCHEDULE
5	100	WIRE, 3/8" STEEL, COMMON GRADE	9306353
29	3	Y-CLEVIS BALL	9312426
30	3	SUSPENSION CLAMP W/SE, ACSR (0.75"-1.18")	9312478
31	1	SHIELDWIRE SUSPENSION CLAMP	9307456
32	1	BONDING CLIP FOR 1" BOLT	9307959
33	40	STAPLE, GALVANIZED, 2"	9314525
34	1	SHIELDWIRE BRACKET, 16"	9313668
35	1	BOLT, MACHINE, 5/8"	93200XX
36	2	WASHER, 3" X 3", 5/8" BOLT	9306399
37	1	LOCKNUT, 5/8"	9322021
38	1	STEEL CROSSARM ASSEMBLY, 115kV, 25'-0" C4808-61	9308437
39	1	CROSS BRACE ASSEMBLY. 12'-6" LIGHT DUTY FOR 115kV	9308131
40	2	BONDING CLIP FOR 7/8" BOLT	9313447
43	1	LOCKNUT, 1"	9307156
44	1	SQUARE NUT, 1"	9319928

SUBASSEMBLY DETAIL - XARM C4808-61

TAG	QTY	DESCRIPTION
38A	2	STRAP
38B	4	WASHER, FLAT
38C	4	2-1" X 16" & 2-1" X 20" HS BOLTS
38D	4	WASHER, CURVED, 4" X 4"
38E	4	PALNUT, 1"

SUBASSEMBLY DETAIL - XBRACE

TAG	QTY	DESCRIPTION
39A	1	CENTER CLAMP
39B	4	BOLT, MACHINE, 7/8", W/ NUT
39C	4	CURVED WASHER FOR 7/8" BOLT

POLE SCHEDULE

STR. NUMBER	POLE HT/CL	ITEM ID
3	90/CL1	9311451
3	80/CL1	9311669
13	90/CL1	9311451
13	80/CL1	9311669
15	80/CL1	9311669
15	70/CL1	9311699
21	80/CL1	9311669
21	70/CL1	9311699

VER	DATE	REVISION DESCRIPTION	DRWN	CHKD	APPVD
1					
2					
3					
4					
5					
6					
7					

VERSION 0

nationalgrid

	NAME	DATE
ORIGINAL		
DRAWN	TRC	08/01/16
CHECKED	TRC	08/01/16
REVIEWED	TRC	08/01/16
APPROVED	HMM	08/01/16

115KV T5890
SINGLE SHIELDWIRE H-FRAME (H1)
WOOD (WD)
SUSPENSION (SU)

PRINTED 8/4/2016 1:40 PM

CONFIDENTIALITY STATEMENT: THIS DOCUMENT CONTAINS CONFIDENTIAL AND PROPRIETARY INFORMATION OF NATIONAL GRID. IT IS TO BE USED BY AUTHORIZED CONTRACTORS FOR NATIONAL GRID SOLELY IN CONNECTION WITH THE SPECIFIC PROJECT FOR WHICH IT HAS BEEN TRANSMITTED. ANY OTHER USE, ITS TRANSMITTAL TO THIRD PARTIES, OR ITS REPRODUCTION WITHOUT PRIOR EXPRESS WRITTEN AUTHORIZATION OF NATIONAL GRID IS STRICTLY PROHIBITED.

PRINTED COPIES ARE NOT DOCUMENT CONTROLLED. FOR THE LATEST AUTHORIZED VERSION PLEASE REFER TO THE ENGINEERING DEPARTMENT DOCUMENTS CABINET IN DOCUMENTUM

NTS

CONFIDENTIALITY STATEMENT: THIS DOCUMENT CONTAINS CONFIDENTIAL AND PROPRIETARY INFORMATION OF NATIONAL GRID. IT IS TO BE USED BY AUTHORIZED CONTRACTORS FOR NATIONAL GRID SOLELY IN CONNECTION WITH THE SPECIFIC PROJECT FOR WHICH IT HAS BEEN TRANSMITTED. ANY OTHER USE, ITS TRANSMITTAL TO THIRD PARTIES, OR ITS REPRODUCTION WITHOUT PRIOR EXPRESS WRITTEN AUTHORIZATION OF NATIONAL GRID IS STRICTLY PROHIBITED.

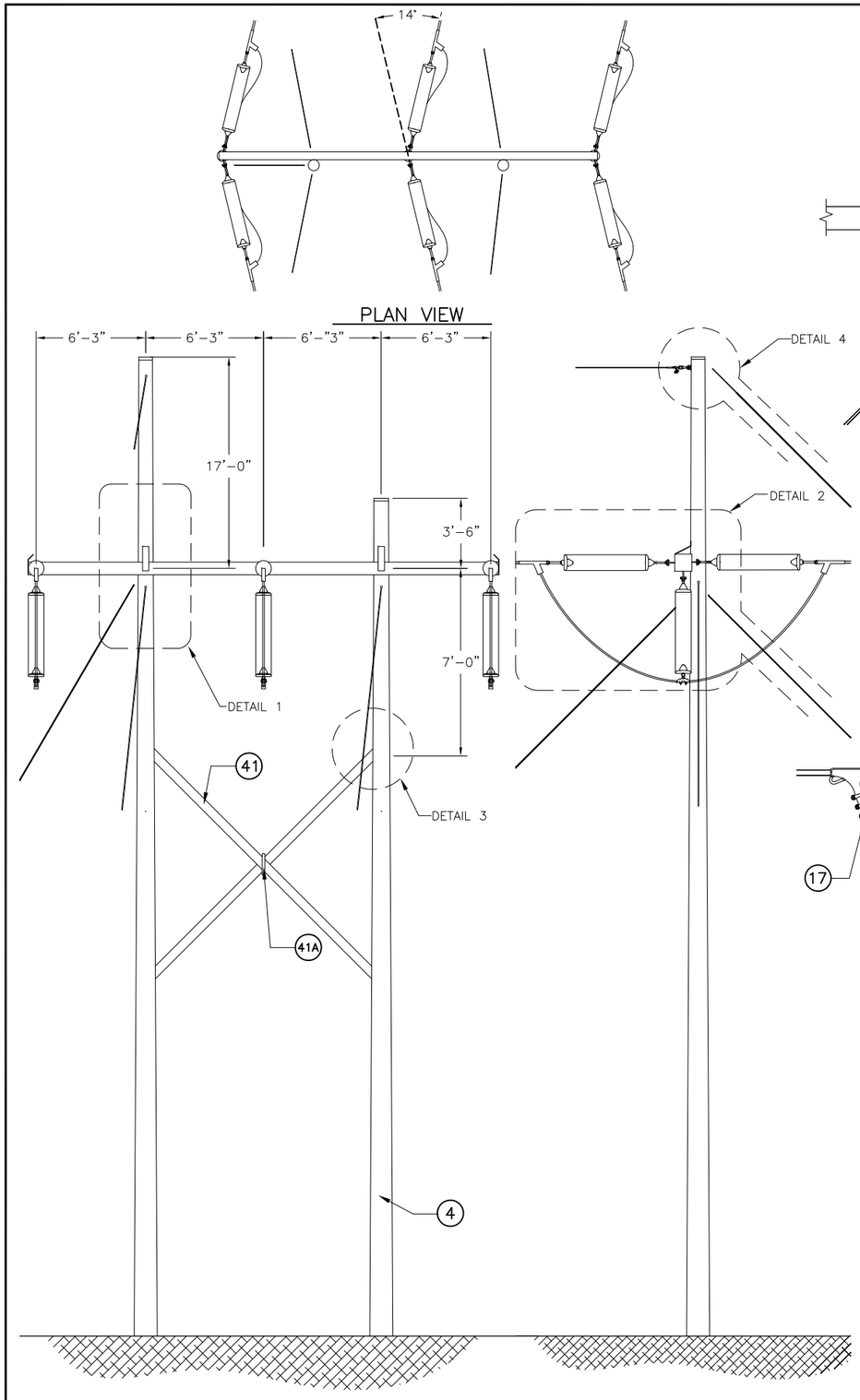

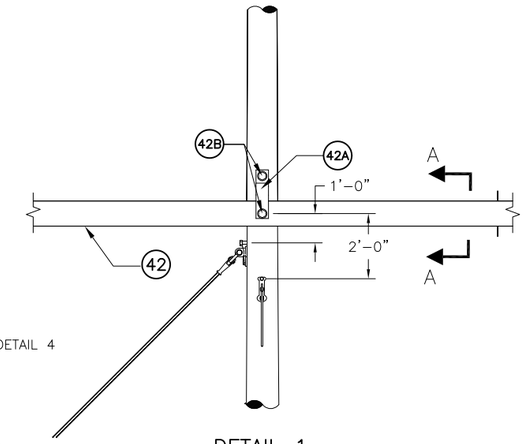

DETAIL 1

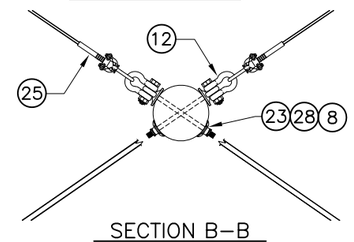

SECTION B-B

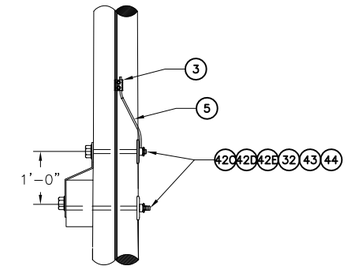

SECTION A-A

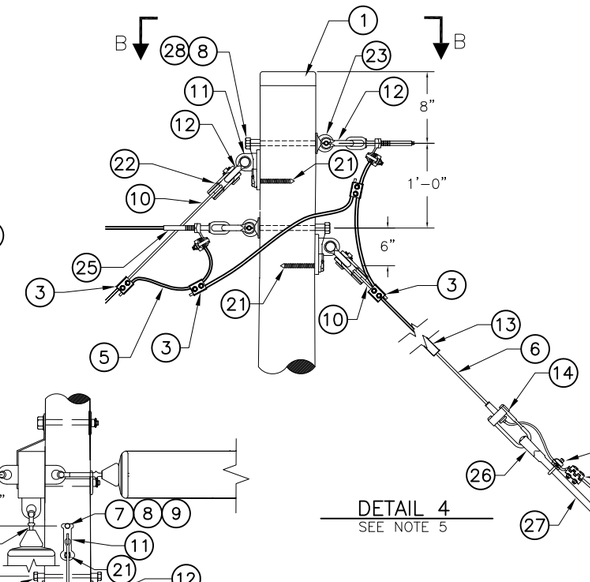

DETAIL 4
SEE NOTE 5

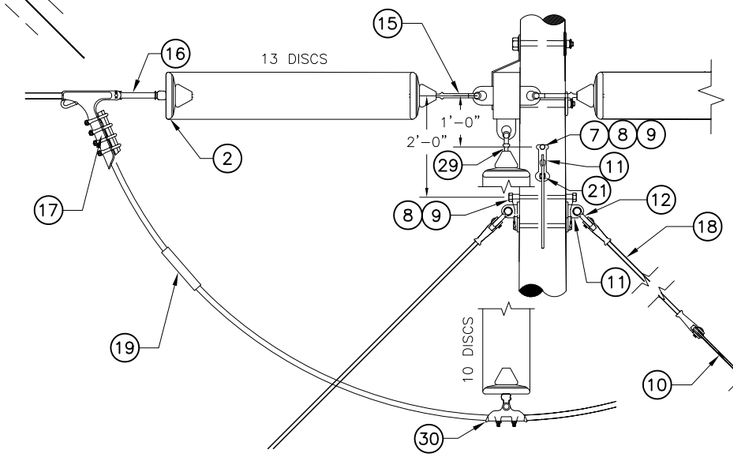

DETAIL 2

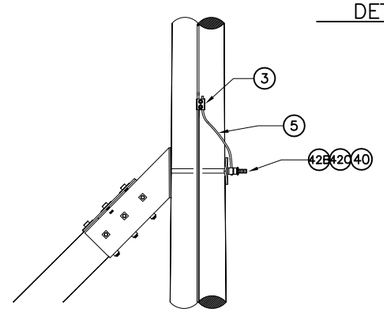

DETAIL 3

MATERIAL LIST			
TAG	QUAN	DESCRIPTION	ITEM ID
1	2	POLE TOPPER	9307970
2	108	INSULATOR, PORCELAIN DISC, 20K BROWN	9311629
3	9	CLAMP, PARALLEL GROOVE	9320568
4	2	POLE, WOOD, SYP	SEE POLE SCHEDULE
5	100	WIRE, 3/8" STEEL, COMMON GRADE	9306353
6	500	WIRE, 19#9 ALUMOWELD	9306396
7	1	WASHER, SQUARE CURVED, 4"X4" FOR 3/4" BOLT	9320428
8	7	LOCKNUT, 3/4"	9322023
9	5	BOLT, MACHINE, 3/4"	9319XXX
10	7	GUY GRIP, 19#9 ALUMOWELD	9307193
11	7	POLE EYE PLATE, 36K	9307178
12	9	ANCHOR SHACKLE, 60K, BNK	9307404
13	7	MARKER, YELLOW GUY	9313584
14	7	ADJUSTABLE, 19#9 ALUMOWELD GRIP	9313523
15	6	HOT LINE Y-CLEVIS BALL	9312243
16	6	HOT LINE SOCKET EYE, 3/4" EYE	9305994
17	6	DEADEND, QUADRANT CLAMP, ALUMINUM, 0.70"-1.42" WIRE SIZE	9320354
18	5	INSULATOR, FIBERGLASS STRAIN	9307240
19	3	CONNECTOR, WEDGE TAP	9314714
20	7	14" SINGLE HELIX ANCHOR	9314918
21	3	5/8" LAG SCREW	9307177
22	2	THIMBLE CLEVIS	9307311
23	2	SHOULDER EYE BOLT, 3/4"	9320620
24	2	ANCHOR ROD GROUND CLAMP	9320250
25	2	CLAMP, COMPRESSION, 3/8" STEEL SW	9306572
26	7	ANCHOR THIMBLE TRIPLE EYE NUT	9311875
27	7	ANCHOR ROD	9313700
28	2	NUT, SQUARE, 3/4"	9307167
29	3	Y-CLEVIS BALL	9312426
30	3	SUSPENSION CLAMP W/SE, ACSR (0.75"-1.18")	9312478
32	1	BONDING CLIP FOR 1" BOLT	9307959
40	2	BONDING CLIP FOR 7/8" BOLT	9313447
41	1	X-BRACE ASSEMBLY, HEAVY DUTY FOR 12'-6' POLE SPACING	9308173
42	1	STEEL CROSSARM, 115kV, 26'-0" (C4808-62)	9308440
43	1	LOCKNUT, 1"	9307156
44	1	SQUARE NUT, 1"	9319928

SUBASSEMBLY DETAIL - X BRACE		
TAG	QTY	DESCRIPTION
41A	1	CENTER CLAMP
41B	4	BOLT, MACHINE, 7/8", W/ NUT
41C	4	CURVED WASHER FOR 7/8" BOLT

SUBASSEMBLY DETAIL - X ARM (C4808-62)		
TAG	QTY	DESCRIPTION
42A	2	STRAP
42B	4	WASHER, FLAT
42C	4	BOLT, 1"
42D	4	WASHER, CURVED, 4" X 4"
42E	4	PALNUT, 1"

POLE SCHEDULE		
STR. NUMBER	POLE HT/CL	ITEM ID
12	85/CL1	9311644
12	70/CL1	9311699

1. SEE SPECIFICATION SP.06.01.301 AND DRAWING SP.06.01.301.201 FOR SIGNAGE REQUIREMENTS.
2. SEE SPECIFICATION SP.06.01.301 AND DRAWING SP.06.01.301.101 FOR GROUNDING DETAILS.
3. SEE SPECIFICATION SP.06.01.301 AND DRAWING SP.06.01.301.402 FOR ANCHOR DETAILS
4. SEE SPECIFICATION SP.06.01.301.401 FOR CORRUGATED PIPE INSTALLATION
5. SEE DRAWING 300317-C-K-2 FOR STAKING DETAILS
6. SEE REFERENCE DRAWING H1.WD.DE.

VER	DATE	DRWN	CHKD	APPVD	REVISION DESCRIPTION	VERSION
1						0
2						
3						
4						
5						
6						
7						

nationalgrid

	NAME	DATE
ORIGINAL	TRC	07/28/16
DRAWN	TRC	07/28/16
CHECKED	TRC	07/28/16
REVIEWED	TRC	07/28/16
APPROVED	NMM	07/28/16

115 KV T5890
SINGLE SHIELDWIRE H-FRAME (H1)
WOOD (WD)
DEADEND (DE)

PRINTED COPIES ARE NOT DOCUMENT CONTROLLED. FOR THE LATEST AUTHORIZED VERSION PLEASE REFER TO THE ENGINEERING DEPARTMENT DOCUMENTS CABINET IN DOCUMENTUM

PRINTED 8/17/2016 10:36 AM

NTS

300317-C-S-3

300317-C-S-3

EXHIBIT D

AGENCY CORRESPONDENCE

Natural Heritage Correspondence

10 Maxwell Drive
Suite 200
Clifton Park, NY 12065

518.348.1190 PHONE
518.348.1194 FAX

www.TRCsolutions.com

August 22, 2016

Via email: NaturalHeritage@dec.ny.gov
NYSDEC-DFWMR
NY Natural Heritage Program-Information Services
625 Broadway, 5th Floor
Albany, NY 12233-4757

Subject: National Grid's
Whitehall-Blissville #7 115 kV Transmission Line
Conductor Clearance Refurbishment Project
Washington County, New York

Dear Information Resources Coordinator:

Niagara Mohawk Power Corporation d/b/a National Grid (herein National Grid) is proposing to conduct a refurbishment and maintenance project on the Whitehall-Blissville #7 115 kV Transmission Line (Whitehall-Blissville #7 Line). The Whitehall-Blissville #7 Line originates at the Whitehall Substation in the Town of Whitehall in Washington County, New York and terminates at the Blissville Substation in the Town of Poultney in Rutland County, Vermont. This Line runs for approximately six (6) miles within New York State before crossing the border into Vermont, where ownership transfers to the Vermont Electric Power Company (VELCO) (See Figure 1: USGS Location Map).

The Whitehall-Blissville #7 Line project (the "Project") is a Conductor Clearance Refurbishment ("CCR") project which is necessary to provide system reliability to the electric utility end users, as well as provide for public safety in areas where structure replacements or other methods are used to mitigate substandard clearances. The work associated with the project will include the replacement of six (6) existing structures. The proposed work is summarized in the attached table and is depicted on Figure 1.

We are requesting a review and confirmation of the latest NY Natural Heritage Program-Information Service records for the presence of rare or state-listed animals or plants,

significant natural communities, or other significant habitats in the immediate vicinity of the right-of-way for project planning purposes. The project will require review by the NY Public Service Commission under Part 102 of the Public Service Law and requires coverage under either an Individual Stormwater Permit or SPDES General Permit for Stormwater Discharges (GP-0-15-002).

If you have any questions regarding the project or the request herein, please contact me at TRC by calling 518-688-3133 or via e-mail at hvaillant@trcsolutions.com or you may contact Tracy Miller of National Grid at 518-761-5981 or her email address at Tracy.Miller@nationalgrid.com.

Sincerely,

Heather Vaillant

Heather Vaillant
Project Manager

cc: Tracy Miller, National Grid

Enclosures: Figure 1: USGS Location Map
Table: Summary of Proposed Work

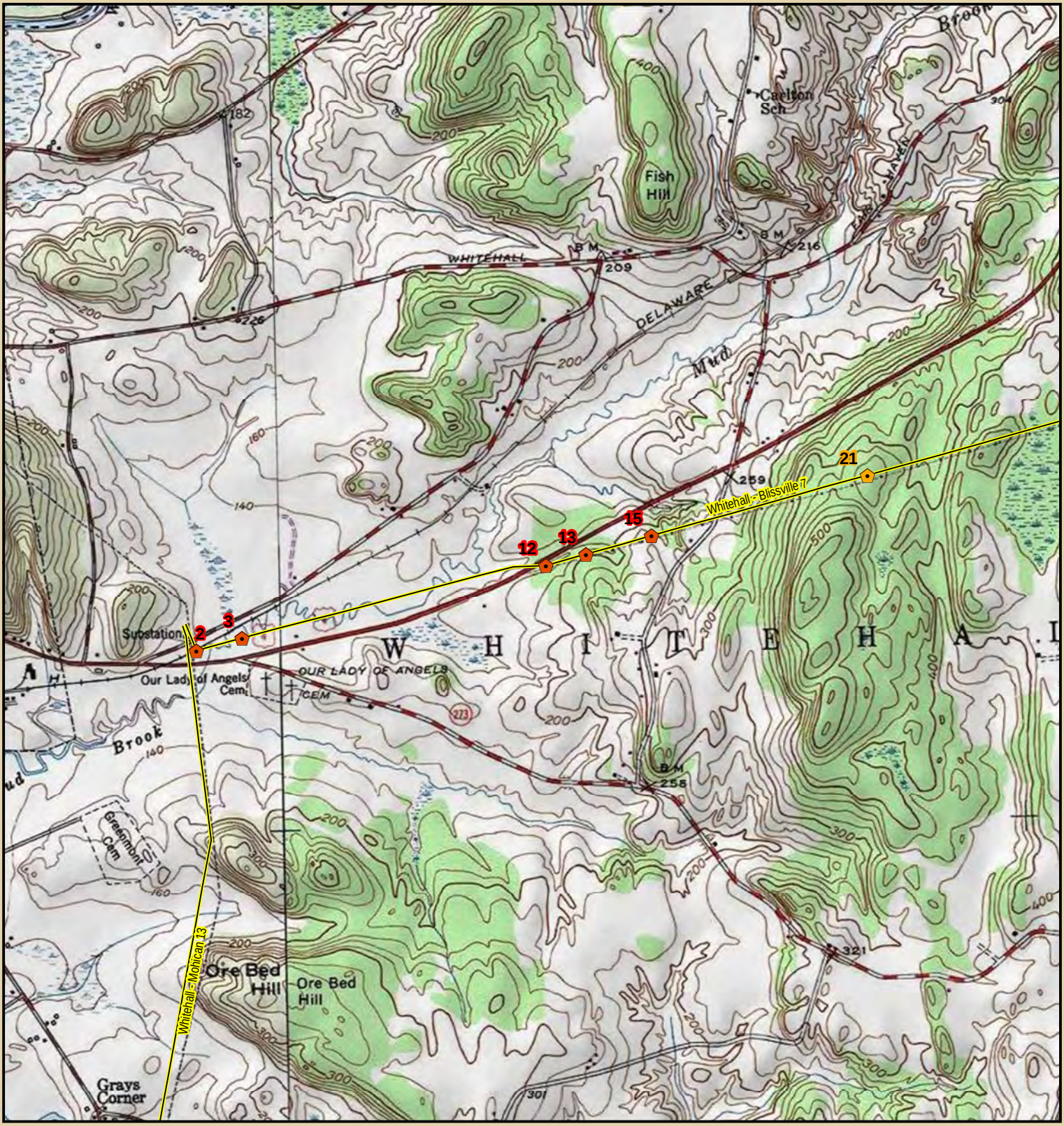

LEGEND

- Existing Structure to be Worked
- Replace Existing Structure
- Existing Transmission Line

N

0 1,000 2,000

Feet

Sources: ESRI, NGRID, TRC, USGS

nationalgrid

Whitehall - Blissville #7

Whitehall, Washington County, NY

Figure 1 - Project Location Map

Created: 8/11/2016

TRC

14 Gabriel Drive
Augusta, ME 04330

Whitehall - Blissville #7 CCR
Summary of Proposed Work

Structure Number	Existing Structure Type	Existing Structure Above Ground Height (ft)	Proposed Work	New Structure Type	New Structure Above Ground Height (ft)	Change in Structure Height (ft)
2	Three Pole Wood Deadend	65	Replace structure	Three Wood Pole Deadend	79	14
3	Two Pole Wood H-Frame Suspension	65	Replace structure	Two Wood Pole Suspension	79	14
12	Two Pole Wood H-Frame Deadend	60	Replace structure	Two Wood Pole Deadend	70	10
13	Two Pole Wood H-Frame Suspension	70	Replace/Relocate Structure	Two Wood Pole Suspension	79	9
15	Two Pole Wood H-Frame Suspension	60	Replace structure	Two Wood Pole Suspension	70	10
21	Two Pole Wood H-Frame Suspension	60	Replace structure	Two Wood Pole Suspension	70	10

Carman, Kristin

From: dec.sm.NaturalHeritage <NaturalHeritage@dec.ny.gov>
Sent: Thursday, September 29, 2016 4:42 PM
To: Carman, Kristin
Cc: Vaillant, Heather; Miller, Tracy A.
Subject: RE: Project Review Request: National Grid Whitehall-Blissville

Dear Ms. Carman:

Regarding National Grid's Whitehall-Blissville #7 115 kV Transmission Line Conductor Clearance Refurbishment Project, in the Town of Whitehall, Washington County, we have reviewed the New York Natural Heritage Program database. Due to the volume of requests we are receiving, and staff limitations, our turn-around time is currently longer than usual. We regret any inconvenience.

We have no records of rare or state-listed animals or plants, or significant natural communities, at the project site or in its immediate vicinity.

The absence of data does not necessarily mean that rare or state-listed species, natural communities or other significant habitats do not exist on or adjacent to the proposed site. Rather, our files currently do not contain information which indicates their presence. For most sites, comprehensive field surveys have not been conducted. We cannot provide a definitive statement on the presence or absence of all rare or state-listed species or significant natural communities. Depending on the nature of the project and the conditions at the project site, further information from on-site surveys or other resources may be required to fully assess impacts on biological resources.

This response applies only to known occurrences of rare or state-listed animals and plants, significant natural communities and other significant habitats maintained in the Natural Heritage database. Your project may require additional review or permits; for information regarding other permits that may be required under state law for regulated areas or activities (e.g., regulated wetlands), please contact the NYS DEC Region 5 Office, Division of Environmental Permits, at dep.r5@dec.ny.gov, or as listed at www.dec.ny.gov/about/39381.html.

Sincerely,

Nicholas Conrad
Information Resources Coordinator
New York Natural Heritage Program
SUNY College of Environmental Science and Forestry
In partnership with NYS Department of Environmental Conservation
625 Broadway
Albany, NY 12233-4757
(518) 402-8935
www.nynhp.org

From: Carman, Kristin [mailto:KCarman@trcsolutions.com]
Sent: Monday, August 22, 2016 10:28 AM
To: dec.sm.NaturalHeritage <NaturalHeritage@dec.ny.gov>
Cc: Vaillant, Heather <HVaillant@trcsolutions.com>; Miller, Tracy A. <Tracy.Miller@nationalgrid.com>
Subject: Project Review Request: National Grid Whitehall-Blissville

Good morning,

United States Department of the Interior

FISH AND WILDLIFE SERVICE
3817 Luker Road
Cortland, NY 13045

November 2, 2016

Ms. Heather Vaillant
TRC Solutions
10 Maxwell Drive, Suite 200
Clifton Park, NY 12065

Dear Ms. Vaillant:

This responds to your October 5, 2016, letters regarding the proposed National Grid Whitehall-Blissville and Fort Miller Tap transmission line upgrade projects located in the Towns of Whitehall and Easton, Washington County, New York. The projects involve the replacement of existing support structures within the existing disturbed right-of-way.

We understand that no federal funding or permits are anticipated and that you are looking for information on federally-listed species for the proposed project. The U.S. Fish and Wildlife Service (Service) appreciates this opportunity to provide comments on species under our jurisdiction.

National Grid has determined that both projects are within the range of the threatened northern long-eared bat (*Myotis septentrionalis*) but that neither will adversely affect this species because tree clearing will be minimal and outside of the breeding season (June 1 through July 31). Given the project descriptions and locations (no known roosts within 150 feet or hibernacula within 0.25 mile), any "take"[1] that may occur incidental to this project is not prohibited under the final 4(d) rule[2]. Based upon the following: 1) the project location (no known roosts or hibernacula); 2) limited tree removal within existing rights-of-way; and 3) limited disturbance, we concur with your determination.

In addition, National Grid has determined that the proposed project may affect, but is not likely to adversely affect, the federally-listed endangered Indiana bat (*Myotis sodalis*) at the Whitehall-Blissville project. If minor tree clearing needs to occur at this site, it will take place between October 1 and March 31 to avoid direct impacts. We concur with your determination based upon the timing of any tree removal, if needed, and the limited disturbance within an existing right-of-way.

---

[1] Take is defined in Section 3 of the ESA as harass, harm, pursue, hunt, shoot, wound, kill, trap, capture, or collect, or to attempt to engage in any such conduct.
[2] http://www.fws.gov/midwest/endangered/mammals/nleb/pdf/FRnlebFinal4dRule14Jan2016.pdf

No further coordination or consultation pursuant to the Endangered Species Act (ESA) of 1973 (87 Stat. 884, as amended; 16 U.S.C. 1531 *et seq.*) is required with the Service at this time. Should project plans change, or if additional information on listed or proposed species or critical habitat becomes available, this determination may be reconsidered. The most recent compilation of federally-listed and proposed endangered and threatened species in New York is available for your information. Until the proposed project is complete, we recommend that you check our website every 90 days from the date of this letter to ensure that listed species presence/absence information for the proposed project is current.*

The above comments pertaining to endangered species under our jurisdiction are provided pursuant to the ESA. This response does not preclude additional Service comments under other legislation.

Any additional information regarding the proposed project and its potential to impact listed species should be coordinated with both this office and with the New York State Department of Environmental Conservation.

We appreciate the opportunity to review this project. If you require additional information please contact Tim Sullivan at 607-753-9334.

Sincerely,

Patricia Cole

for David A. Stilwell
Field Supervisor

*Additional information referred to above may be found on our website at:
http://www.fws.gov/northeast/nyfo/es/section7.htm

cc: NYSDEC, Warrensburg, NY (Env. Permits)

USFWS Correspondence

10 Maxwell Drive
Suite 200
Clifton Park, NY 12065

518.348.1190 PHONE
518.348.1194 FAX

www.trcsolutions.com

From: Heather Vaillant
TRC
10 Maxwell Drive
Suite 200
Clifton Park, NY 12065
HVaillant@trcsolutions.com

To: U.S. Fish and Wildlife Service
New York Field Office
3817 Luker Road
Cortland, NY 13045

October 5, 2016

Re: Online Project Review Request, National Grid, Whitehall-Blissville #7 115 kV Transmission Line Conductor Clearance Refurbishment Project, Town of Whitehall, Washington County, New York. Consultation Tracking Number: 5E1NY00-2016-SLI-2273

We have reviewed the above referenced project using the New York Field Office's online project review process and have followed all guidance and instructions in completing the review. We completed our review on September 19, 2016 and are submitting our project review package in accordance with the instructions for further review.

National Grid proposes to conduct a refurbishment and maintenance project on the Whitehall-Blissville #7 115 kV Transmission Line (Whitehall-Blissville #7 Line). The Whitehall-Blissville #7 Line originates at the Whitehall Substation in the Town of Whitehall in Washington County, New York and terminates at the Blissville Substation in the Town of Poultney in Rutland County, Vermont. This Line runs for approximately six (6) miles within New York State before crossing the border into Vermont, where ownership transfers to the Vermont Electric Power Company (VELCO) (See Figure 1: USGS Location Map).

The information derived from this data request will support environmental due diligence. There is currently no federal nexus associated with this project.

The Whitehall-Blissville #7 Line project (the "Project") is a Conductor Clearance Refurbishment ("CCR") project which is necessary to provide system reliability to the electric utility end users, as well as provide for public safety in areas where structure replacements or other methods are used to mitigate substandard clearances. The work associated with the project will include the replacement of six (6) existing structures.

The Project consists of maintained and cleared utility right-of-way (ROW) surrounded primarily by forested land and agricultural fields. Attachment A includes representative photographs of the Project Site.

The location of the Project Site/Action Area is identified on the enclosed map, Figure 1.

The Project is expected to begin construction in the January 2017 and be completed by April 30, 2017.

The enclosed project review package provides the information about the species considered in our review, and the species conclusions table included in the package identifies our determinations for the resources that may be affected by the project (see Attachment D). Our correspondence with the New York Natural Heritage Program (NYNHP) is included in Attachment C. The USFWS IPaC Official Species list is included as Attachment D.

For additional information, please contact me at the address listed above.

Sincerely,

Heather Vaillant

Heather Vaillant
Project Manager - TRC

Figures: Figure 1. Site Location Map

Attachments:

Attachment A. Photograph Log
Attachment B. NYNHP Correspondence
Attachment C. USFWS, IPaC Official Species List
Attachment D. Species Conclusion Table

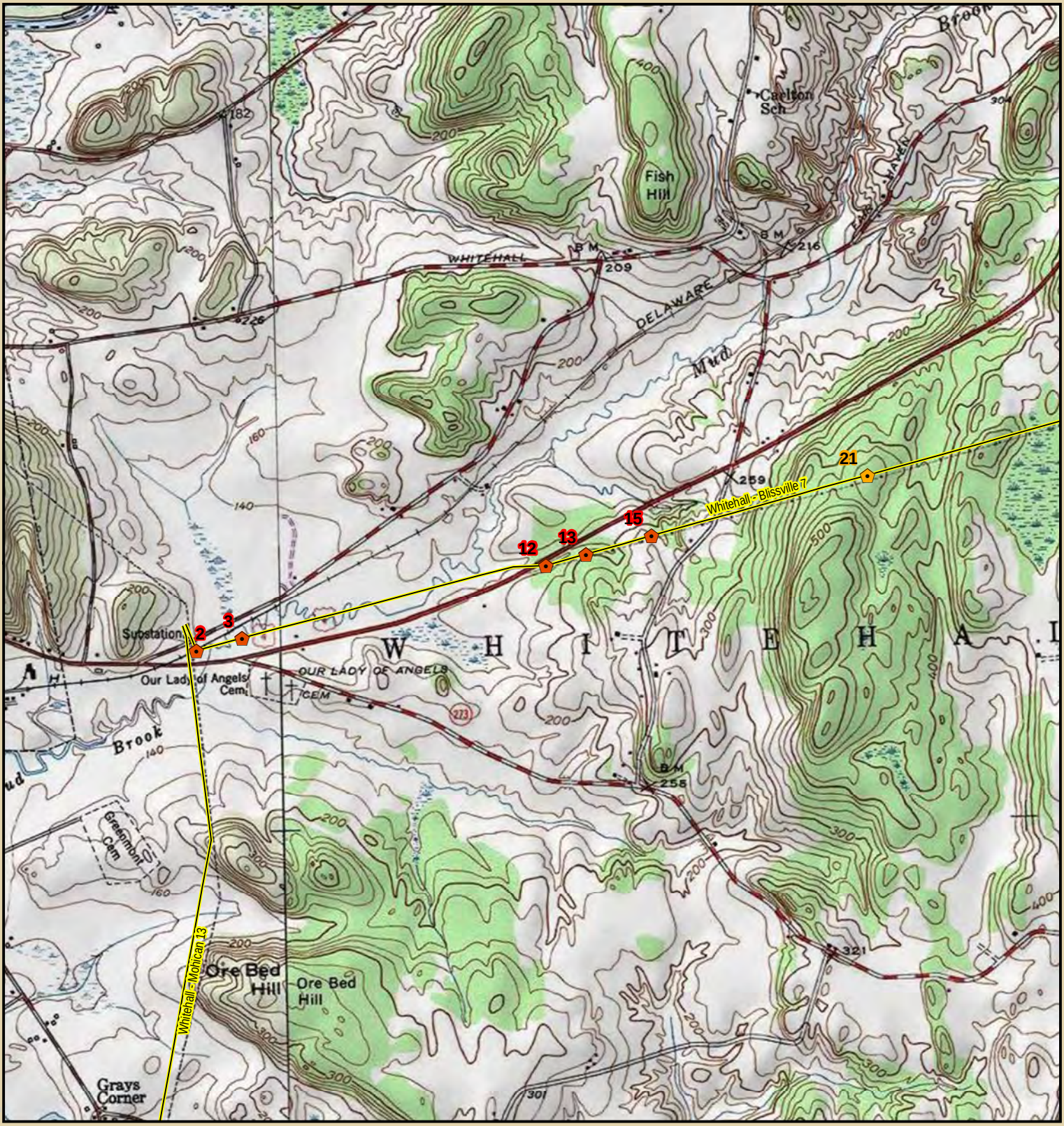

LEGEND

- Existing Structure to be Worked
- Replace Existing Structure
- Existing Transmission Line

N

0 1,000 2,000

Feet

Sources: ESRI, NGRID, TRC, USGS

nationalgrid

Whitehall - Blissville #7

Whitehall, Washington County, NY

Figure 1 - Project Location Map

Created: 8/11/2016

TRC

14 Gabriel Drive
Augusta, ME 04330

ATTACHMENT A

Photograph Log

Photograph 1. Access to Structures 2 through 4, facing south. Photo taken 8/18/16

Photograph 2. Access to Structure 15, facing north. Photo taken on 8/18/16.

Photograph 3. Access to Structures 20 and 21. Photo taken 8/18/16**.**

Photograph 4. Stream S-1, facing north. Photo taken 8/18/16.

Photograph 5. Wetland W-1, a PEM wetland, facing south. Photo taken 8/18/16.

Photograph 6. Wetland W-2, a PEM wetland, facing east. Photo taken 8/18/16.

Photograph 7. Wetland W-4, a PEM wetland, facing east. Photo taken 8/18/2016.

10 Maxwell Drive
Suite 200
Clifton Park, NY 12065

518.348.1190 PHONE
518.348.1194 FAX

www.TRCsolutions.com

August 22, 2016

Via email: NaturalHeritage@dec.ny.gov
NYSDEC-DFWMR
NY Natural Heritage Program-Information Services
625 Broadway, 5th Floor
Albany, NY 12233-4757

Subject: National Grid's
Whitehall-Blissville #7 115 kV Transmission Line
Conductor Clearance Refurbishment Project
Washington County, New York

Dear Information Resources Coordinator:

Niagara Mohawk Power Corporation d/b/a National Grid (herein National Grid) is proposing to conduct a refurbishment and maintenance project on the Whitehall-Blissville #7 115 kV Transmission Line (Whitehall-Blissville #7 Line). The Whitehall-Blissville #7 Line originates at the Whitehall Substation in the Town of Whitehall in Washington County, New York and terminates at the Blissville Substation in the Town of Poultney in Rutland County, Vermont. This Line runs for approximately six (6) miles within New York State before crossing the border into Vermont, where ownership transfers to the Vermont Electric Power Company (VELCO) (See Figure 1: USGS Location Map).

The Whitehall-Blissville #7 Line project (the "Project") is a Conductor Clearance Refurbishment ("CCR") project which is necessary to provide system reliability to the electric utility end users, as well as provide for public safety in areas where structure replacements or other methods are used to mitigate substandard clearances. The work associated with the project will include the replacement of six (6) existing structures. The proposed work is summarized in the attached table and is depicted on Figure 1.

We are requesting a review and confirmation of the latest NY Natural Heritage Program-Information Service records for the presence of rare or state-listed animals or plants,

significant natural communities, or other significant habitats in the immediate vicinity of the right-of-way for project planning purposes. The project will require review by the NY Public Service Commission under Part 102 of the Public Service Law and requires coverage under either an Individual Stormwater Permit or SPDES General Permit for Stormwater Discharges (GP-0-15-002).

If you have any questions regarding the project or the request herein, please contact me at TRC by calling 518-688-3133 or via e-mail at hvaillant@trcsolutions.com or you may contact Tracy Miller of National Grid at 518-761-5981 or her email address at Tracy.Miller@nationalgrid.com.

Sincerely,

Heather Vaillant

Heather Vaillant
Project Manager

cc: Tracy Miller, National Grid

Enclosures: Figure 1: USGS Location Map
Table: Summary of Proposed Work

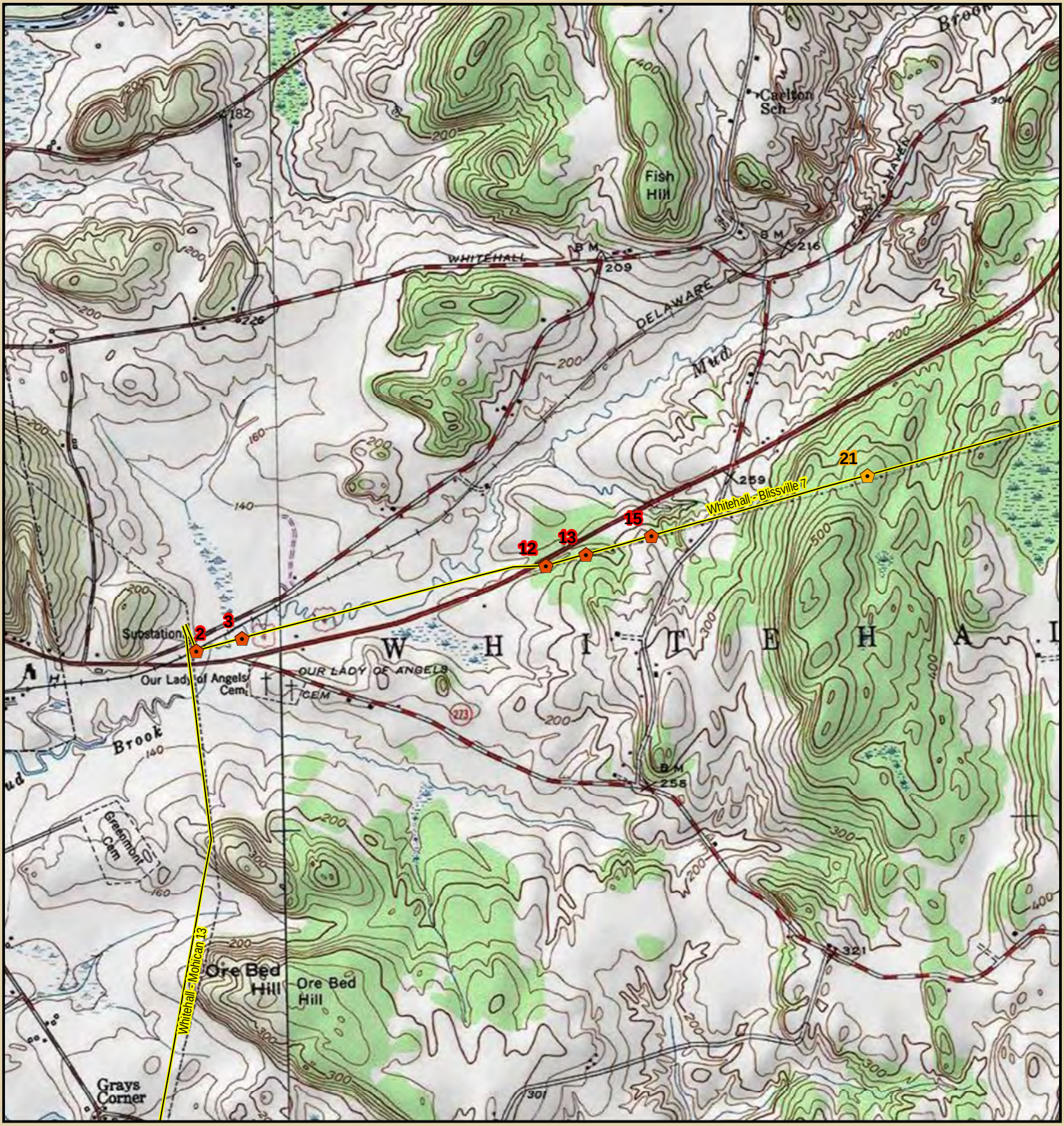

LEGEND

- Existing Structure to be Worked
- Replace Existing Structure
- Existing Transmission Line

N

0 1,000 2,000

Feet

Sources: ESRI, NGRID, TRC, USGS

nationalgrid

Whitehall - Blissville #7

Whitehall, Washington County, NY

Figure 1 - Project Location Map

Created: 8/11/2016

TRC

14 Gabriel Drive
Augusta, ME 04330

Whitehall - Blissville #7 CCR
Summary of Proposed Work

Structure Number	Existing Structure Type	Existing Structure Above Ground Height (ft)	Proposed Work	New Structure Type	New Structure Above Ground Height (ft)	Change in Structure Height (ft)
2	Three Pole Wood Deadend	65	Replace structure	Three Wood Pole Deadend	79	14
3	Two Pole Wood H-Frame Suspension	65	Replace structure	Two Wood Pole Suspension	79	14
12	Two Pole Wood H-Frame Deadend	60	Replace structure	Two Wood Pole Deadend	70	10
13	Two Pole Wood H-Frame Suspension	70	Replace/Relocate Structure	Two Wood Pole Suspension	79	9
15	Two Pole Wood H-Frame Suspension	60	Replace structure	Two Wood Pole Suspension	70	10
21	Two Pole Wood H-Frame Suspension	60	Replace structure	Two Wood Pole Suspension	70	10

Carman, Kristin

From: dec.sm.NaturalHeritage <NaturalHeritage@dec.ny.gov>
Sent: Thursday, September 29, 2016 4:42 PM
To: Carman, Kristin
Cc: Vaillant, Heather; Miller, Tracy A.
Subject: RE: Project Review Request: National Grid Whitehall-Blissville

Dear Ms. Carman:

Regarding National Grid's Whitehall-Blissville #7 115 kV Transmission Line Conductor Clearance Refurbishment Project, in the Town of Whitehall, Washington County, we have reviewed the New York Natural Heritage Program database. Due to the volume of requests we are receiving, and staff limitations, our turn-around time is currently longer than usual. We regret any inconvenience.

We have no records of rare or state-listed animals or plants, or significant natural communities, at the project site or in its immediate vicinity.

The absence of data does not necessarily mean that rare or state-listed species, natural communities or other significant habitats do not exist on or adjacent to the proposed site. Rather, our files currently do not contain information which indicates their presence. For most sites, comprehensive field surveys have not been conducted. We cannot provide a definitive statement on the presence or absence of all rare or state-listed species or significant natural communities. Depending on the nature of the project and the conditions at the project site, further information from on-site surveys or other resources may be required to fully assess impacts on biological resources.

This response applies only to known occurrences of rare or state-listed animals and plants, significant natural communities and other significant habitats maintained in the Natural Heritage database. Your project may require additional review or permits; for information regarding other permits that may be required under state law for regulated areas or activities (e.g., regulated wetlands), please contact the NYS DEC Region 5 Office, Division of Environmental Permits, at dep.r5@dec.ny.gov, or as listed at www.dec.ny.gov/about/39381.html.

Sincerely,

Nicholas Conrad
Information Resources Coordinator
New York Natural Heritage Program
SUNY College of Environmental Science and Forestry
In partnership with NYS Department of Environmental Conservation
625 Broadway
Albany, NY 12233-4757
(518) 402-8935
www.nynhp.org

From: Carman, Kristin [mailto:KCarman@trcsolutions.com]
Sent: Monday, August 22, 2016 10:28 AM
To: dec.sm.NaturalHeritage <NaturalHeritage@dec.ny.gov>
Cc: Vaillant, Heather <HVaillant@trcsolutions.com>; Miller, Tracy A. <Tracy.Miller@nationalgrid.com>
Subject: Project Review Request: National Grid Whitehall-Blissville

Good morning,

Please find attached a project review package prepared on behalf of National Grid for the Whitehall-Blissville Project in Washington County, New York. We are submitting this package for further review on behalf of National Grid.

Thank you,

Kristin

Kristin A. Carman
Environmental Scientist/Biologist

10 Maxwell Drive, Suite 200, Clifton Park, NY 12065
T: 518.688.3143 | F: 518.348.1194

Follow us on LinkedIn or Twitter | www.trcsolutions.com

United States Department of the Interior

FISH AND WILDLIFE SERVICE
New York Ecological Services Field Office
3817 LUKER ROAD
CORTLAND, NY 13045
PHONE: (607)753-9334 FAX: (607)753-9699
URL: www.fws.gov/northeast/nyfo/es/section7.htm

Consultation Code: 05E1NY00-2016-SLI-2273 August 16, 2016
Event Code: 05E1NY00-2016-E-05383
Project Name: Whitehall-Blissville #7 115 kV CCR Project

Subject: List of threatened and endangered species that may occur in your proposed project location, and/or may be affected by your proposed project

To Whom It May Concern:

The enclosed species list identifies threatened, endangered, proposed and candidate species, as well as proposed and final designated critical habitat, that may occur within the boundary of your proposed project and/or may be affected by your proposed project. The species list fulfills the requirements of the U.S. Fish and Wildlife Service (Service) under section 7(c) of the Endangered Species Act (ESA) of 1973, as amended (16 U.S.C. 1531 *et seq.*). This list can also be used to determine whether listed species may be present for projects without federal agency involvement. New information based on updated surveys, changes in the abundance and distribution of species, changed habitat conditions, or other factors could change this list.

Please feel free to contact us if you need more current information or assistance regarding the potential impacts to federally proposed, listed, and candidate species and federally designated and proposed critical habitat. Please note that under 50 CFR 402.12(e) of the regulations implementing section 7 of the ESA, the accuracy of this species list should be verified after 90 days. This verification can be completed formally or informally as desired. The Service recommends that verification be completed by visiting the ECOS-IPaC site at regular intervals during project planning and implementation for updates to species lists and information. An updated list may be requested through the ECOS-IPaC system by completing the same process used to receive the enclosed list. If listed, proposed, or candidate species were identified as potentially occurring in the project area, coordination with our office is encouraged. Information on the steps involved with assessing potential impacts from projects can be found at: http://www.fws.gov/northeast/nyfo/es/section7.htm

Please be aware that bald and golden eagles are protected under the Bald and Golden Eagle Protection Act (16 U.S.C. 668 *et seq.*), and projects affecting these species may require development of an eagle conservation plan (

http://www.fws.gov/windenergy/eagle_guidance.html). Additionally, wind energy projects should follow the Services wind energy guidelines (http://www.fws.gov/windenergy/) for minimizing impacts to migratory birds and bats.

Guidance for minimizing impacts to migratory birds for projects including communications towers (e.g., cellular, digital television, radio, and emergency broadcast) can be found at: http://www.fws.gov/migratorybirds/CurrentBirdIssues/Hazards/towers/towers.htm; http://www.towerkill.com; and http://www.fws.gov/migratorybirds/CurrentBirdIssues/Hazards/towers/comtow.html.

We appreciate your concern for threatened and endangered species. The Service encourages Federal agencies to include conservation of threatened and endangered species into their project planning to further the purposes of the ESA. Please include the Consultation Tracking Number in the header of this letter with any request for consultation or correspondence about your project that you submit to our office.

Attachment

United States Department of Interior
Fish and Wildlife Service

Project name: Whitehall-Blissville #7 115 kV CCR Project

Official Species List

Provided by:

New York Ecological Services Field Office
3817 LUKER ROAD
CORTLAND, NY 13045
(607) 753-9334
http://www.fws.gov/northeast/nyfo/es/section7.htm

Consultation Code: 05E1NY00-2016-SLI-2273
Event Code: 05E1NY00-2016-E-05383

Project Type: TRANSMISSION LINE

Project Name: Whitehall-Blissville #7 115 kV CCR Project
Project Description: Work proposed on the six (6) mile section of the Whitehall-Blissville #7 Line running from the Whitehall Substation to the Vermont border (approximately Structure 55).

Please Note: The FWS office may have modified the Project Name and/or Project Description, so it may be different from what was submitted in your previous request. If the Consultation Code matches, the FWS considers this to be the same project. Contact the office in the 'Provided by' section of your previous Official Species list if you have any questions or concerns.

Project Location Map:

Project Coordinates: MULTIPOLYGON (((-73.37910175323486 43.54943458688688, -73.3756148815155 43.54990892393936, -73.3635663986206 43.55192287083458, -73.35915684700012 43.55238163697092, -73.33605766296387 43.55670475310701, -73.32893371582031 43.5580964816954, -73.31573724746704 43.55932490815374, -73.31578016281128 43.55943375485988, -73.32882642745972 43.558267529918304, -73.35217237472534 43.55383566927701, -73.35940361022949 43.55249827187254, -73.36360931396484 43.55206283375485, -73.37560415267943 43.55001001168111, -73.37887644767761 43.54951234731524, -73.37910175323486 43.54943458688688)))

Project Counties: Washington, NY

Endangered Species Act Species List

There are a total of 2 threatened or endangered species on your species list. Species on this list should be considered in an effects analysis for your project and could include species that exist in another geographic area. For example, certain fish may appear on the species list because a project could affect downstream species. Critical habitats listed under the **Has Critical Habitat** column may or may not lie within your project area. See the **Critical habitats within your project area** section further below for critical habitat that lies within your project. Please contact the designated FWS office if you have questions.

Mammals	Status	Has Critical Habitat	Condition(s)
Indiana bat *(Myotis sodalis)* Population: Entire	Endangered		
Northern long-eared Bat *(Myotis septentrionalis)*	Threatened		

Critical habitats that lie within your project area

There are no critical habitats within your project area.

Species Conclusion Table

Project Name: National Grid
Whitehall-Blissville #7 CCR Project

Date: October 5, 2016

Species Name/Critical Habitat	Potential Habitat Present?	Species Present?	Critical Habitat Present?	ESA/Eagle Act Determination	Notes / Documentation Summary (include full rationale in your report)
Indiana bat (*Myotis sodalis*)	Yes	Potentially	No	*Not likely to adversely affect*	The Indiana bat is a Federal and New York State listed endangered species. During the winter, Indiana bats hibernate in caves and occasionally abandoned mines. These bats need cool, humid caves with stable temperatures, under 50° F but above freezing for hibernation. No caves or mines are located within or in the vicinity of the Project. The Indiana bat mates in the fall prior to hibernation and in the spring, emerges and travels to wooded or semi-wooded habitats far from the winter hibernacula for the summer. After the spring emergence, females group to form small maternity colonies, where they give birth to their young. These colonies are located in the crevices or under loose bark in large dead or living trees. Roost trees consist of hollow trees, either dead or alive, and trees with exfoliating bark, and may be located in upland areas or floodplain forests. Occasionally man-made structures, such as sheds or bridges, will also serve as roosts. A consultation letter was sent to the NYNHP on August 22, 2016 (see Attachment C). A response was received on September 29, 2016 which indicated there were no records of the Indiana bat occurring within the Project Site or immediate vicinity. There is potential roosting habitat found within the vicinity of the Project, but work will occur within current maintained Right-of-Way (ROW). Any tree clearing will be performed between October 1 and March 31 to avoid impacts to roosting bats. Therefore, the Project is not likely to adversely affect the Indiana bat.

Species Name/Critical Habitat	Potential Habitat Present?	Species Present?	Critical Habitat Present?	ESA/Eagle Act Determination	Notes / Documentation Summary (include full rationale in your report)
Northern long-eared bat (*Myotis septentrionalis*)	Yes	Potentially	No	*May affect but complies with the Final 4d rule*	The northern long-eared bat is a Federal and New York State listed threatened species and is found throughout the state. The northern long-eared bat (NLEB) is similar to the Indiana bat in its use of caves and mines for hibernation and is also found in wooded or semi-wooded habitat during the summer months. This bat also utilizes crevices and loose bark on trees for roosting although it is believed to be less selective of roost trees than the Indiana bat. A consultation letter was sent to the NYNHP on August 22, 2016 (see Attachment C). A response was received on September 29, 2016 which indicated there were no records of the NLEB bat occurring within the Project Site or immediate vicinity. During the site visit on August 18, 2016 potential NLEB roosting habitat was identified in the vicinity of the Project. Any tree clearing will be performed outside of the seasonal clearing restrictions for the northern long-eared bat (June 1 through July 31). Therefore, the Project may affect NLEB but complies with the Final 4d rule.
Bald Eagle (*Haliaeetus leucocephalus*)	No	Unlikely	No	*No Effect*	Bald Eagles choose the tops of large trees to build nests, which they often enlarge each year. They may also nest in cliffs or on the ground, in treeless regions near large open waterways. Bald eagles generally avoid areas with human activities and perch in either deciduous or coniferous trees. Although there are forested areas in the vicinity of the Project is located in a cleared and maintained ROW, which are generally avoided by bald eagles due to the lack of suitable habitat and the level of human presence/activity. No bald eagle nests were observed during wetland and waterbody delineations. Based on the factors considered herein, the Project is anticipated to have no effect on the bald eagle.

United States Department of the Interior

FISH AND WILDLIFE SERVICE
3817 Luker Road
Cortland, NY 13045

November 2, 2016

Ms. Heather Vaillant
TRC Solutions
10 Maxwell Drive, Suite 200
Clifton Park, NY 12065

Dear Ms. Vaillant:

This responds to your October 5, 2016, letters regarding the proposed National Grid Whitehall-Blissville and Fort Miller Tap transmission line upgrade projects located in the Towns of Whitehall and Easton, Washington County, New York. The projects involve the replacement of existing support structures within the existing disturbed right-of-way.

We understand that no federal funding or permits are anticipated and that you are looking for information on federally-listed species for the proposed project. The U.S. Fish and Wildlife Service (Service) appreciates this opportunity to provide comments on species under our jurisdiction.

National Grid has determined that both projects are within the range of the threatened northern long-eared bat (*Myotis septentrionalis*) but that neither will adversely affect this species because tree clearing will be minimal and outside of the breeding season (June 1 through July 31). Given the project descriptions and locations (no known roosts within 150 feet or hibernacula within 0.25 mile), any "take"[1] that may occur incidental to this project is not prohibited under the final 4(d) rule[2]. Based upon the following: 1) the project location (no known roosts or hibernacula); 2) limited tree removal within existing rights-of-way; and 3) limited disturbance, we concur with your determination.

In addition, National Grid has determined that the proposed project may affect, but is not likely to adversely affect, the federally-listed endangered Indiana bat (*Myotis sodalis*) at the Whitehall-Blissville project. If minor tree clearing needs to occur at this site, it will take place between October 1 and March 31 to avoid direct impacts. We concur with your determination based upon the timing of any tree removal, if needed, and the limited disturbance within an existing right-of-way.

---

[1] Take is defined in Section 3 of the ESA as harass, harm, pursue, hunt, shoot, wound, kill, trap, capture, or collect, or to attempt to engage in any such conduct.
[2] http://www.fws.gov/midwest/endangered/mammals/nleb/pdf/FRnlebFinal4dRule14Jan2016.pdf

No further coordination or consultation pursuant to the Endangered Species Act (ESA) of 1973 (87 Stat. 884, as amended; 16 U.S.C. 1531 *et seq.*) is required with the Service at this time. Should project plans change, or if additional information on listed or proposed species or critical habitat becomes available, this determination may be reconsidered. The most recent compilation of federally-listed and proposed endangered and threatened species in New York is available for your information. Until the proposed project is complete, we recommend that you check our website every 90 days from the date of this letter to ensure that listed species presence/absence information for the proposed project is current.*

The above comments pertaining to endangered species under our jurisdiction are provided pursuant to the ESA. This response does not preclude additional Service comments under other legislation.

Any additional information regarding the proposed project and its potential to impact listed species should be coordinated with both this office and with the New York State Department of Environmental Conservation.

We appreciate the opportunity to review this project. If you require additional information please contact Tim Sullivan at 607-753-9334.

Sincerely,

Patricia Cole

for David A. Stilwell
Field Supervisor

*Additional information referred to above may be found on our website at:
http://www.fws.gov/northeast/nyfo/es/section7.htm

cc: NYSDEC, Warrensburg, NY (Env. Permits)

Office of Parks, Recreation and Historic Preservation Correspondence

10 Maxwell Drive
Suite 200
Clifton Park, NY 12065

518.348.1190 PHONE
518.348.1194 FAX

www.TRCsolutions.com

August 22, 2016

New York State Historic Preservation Office
Peebles Island Resource Center
P.O. Box 189
Waterford, NY 12188-0189

Submitted online via the Cultural Resource Information System

Subject: National Grid
Whitehall-Blissville 115 kV Transmission Line
Conductor Clearance Refurbishment Project
Washington County, New York

Project Review Coordinator:

Niagara Mohawk Power Corporation d/b/a National Grid (herein National Grid) is proposing to conduct a refurbishment and maintenance project on the Whitehall-Blissville #7 115 kV Transmission Line (Whitehall-Blissville #7 Line). The Whitehall-Blissville #7 Line originates at the Whitehall Substation in the Town of Whitehall in Washington County, New York and terminates at the Blissville Substation in the Town of Poultney in Rutland County, Vermont. This Line runs for approximately six (6) miles within New York State before crossing the border into Vermont, where ownership transfers to the Vermont Electric Power Company (VELCO) (See Figure 1: USGS Location Map).

The Whitehall-Blissville #7 Line project (the "Project") is a Conductor Clearance Refurbishment ("CCR") project which is necessary to provide system reliability to the electric utility end users, as well as provide for public safety in areas where structure replacements or other methods are used to mitigate substandard clearances. The work associated with the project will include the replacement of six (6) existing structures. The proposed work is summarized in the attached table and is depicted on Figure 1.

The Whitehall-Blissville #7 line is supported on two pole wood H-frame suspension towers. The replacement structures and new intermediate structures to be installed for this project will be wooden two-pole structures. The new/replacement poles will be set in 36- to 48-inch diameter culverts, and the area to be excavated during construction would

be limited to a 6-foot diameter area. The proposed poles will be embedded up to 12 feet below grade.

Access to structures will be required to allow safe ingress and egress of construction equipment to perform proposed work activities. Some existing access roads will require repair or minor upgrade (e.g., repair and level ruts) to accommodate passage of vehicles. In addition, new temporary access roads will be required in some locations. No grading or grubbing will be required along the access routes.

The project will require review by the NY Public Service Commission under Part 102 of the Public Service Law and requires coverage under either an Individual Stormwater Permit or the NYSDEC State Pollutant Discharge Elimination System General Permit (GP-0-15-002).

On behalf of National Grid, TRC formally requests confirmation and review of the current records for any known state historic or archeological resource information, as well as comment on the potential effect of this proposed project on eligible or listed historic properties or archeological sites for the project planning process.

If you have any questions regarding the project or the request herein, please contact me at TRC Solutions by calling (518) 688-3133 or email at hvaillant@trcsolutions.com. Tracy Miller of National Grid may also be contacted, via phone at (518) 761-5981 or email at Tracy.Miller@nationalgrid.com.

Sincerely,

Heather Vaillant

Heather Vaillant
Project Manager

cc: Tracy Miller, National Grid
Charles Vandrei, DEC APO

Attachments: Figure 1: USGS Location Map
Table: Summary of Proposed Work

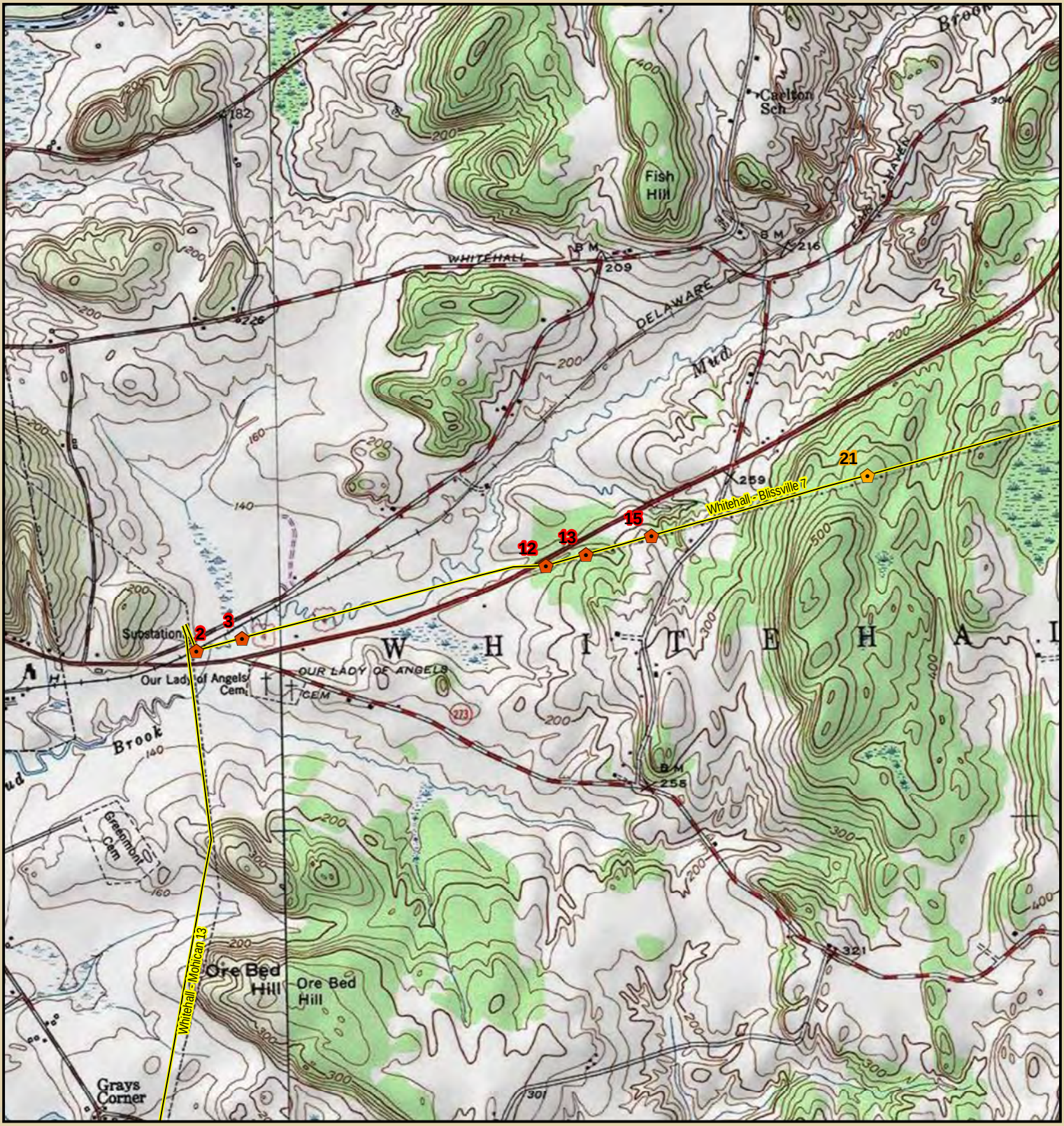

LEGEND

- Existing Structure to be Worked
- Replace Existing Structure
- Existing Transmission Line

N

0 1,000 2,000

Feet

Sources: ESRI, NGRID, TRC, USGS

nationalgrid

Whitehall - Blissville #7

Whitehall, Washington County, NY

Figure 1 - Project Location Map

Created: 8/11/2016

TRC

14 Gabriel Drive
Augusta, ME 04330

Whitehall - Blissville #7 CCR
Summary of Proposed Work

Structure Number	Existing Structure Type	Existing Structure Above Ground Height (ft)	Proposed Work	New Structure Type	New Structure Above Ground Height (ft)	Change in Structure Height (ft)
2	Three Pole Wood Deadend	65	Replace structure	Three Wood Pole Deadend	79	14
3	Two Pole Wood H-Frame Suspension	65	Replace structure	Two Wood Pole Suspension	79	14
12	Two Pole Wood H-Frame Deadend	60	Replace structure	Two Wood Pole Deadend	70	10
13	Two Pole Wood H-Frame Suspension	70	Replace/Relocate Structure	Two Wood Pole Suspension	79	9
15	Two Pole Wood H-Frame Suspension	60	Replace structure	Two Wood Pole Suspension	70	10
21	Two Pole Wood H-Frame Suspension	60	Replace structure	Two Wood Pole Suspension	70	10

NEW YORK STATE OF OPPORTUNITY. | Parks, Recreation, and Historic Preservation

ANDREW M. CUOMO
Governor

ROSE HARVEY
Commissioner

September 08, 2016

Ms. Kristin Carman
Environmental Scientist
TRC
10 Maxwell Drive
Suite 200
Clifton Park, NY 12065

Re: USACE
Whitehall-Blissville #7 115 kV Conductor Clearance Refurbishment Project
Whitehall, Washington County, NY
16PR05847

Dear Ms. Carman:

Thank you for requesting the comments of the State Historic Preservation Office (SHPO). W have reviewed the project in accordance with Section 106 of the National Historic Preservati Act of 1966. These comments are those of the SHPO and relate only to Historic/Cultural resources. They do not include potential environmental impacts to New York State Parkland that may be involved in or near your project. Such impacts must be considered as part of th environmental review of the project pursuant to the National Environmental Policy Act and/o the State Environmental Quality Review Act (New York Environmental Conservation Law Article 8).

Based upon this review, the New York SHPO has determined that no historic properties will affected by this undertaking.

If further correspondence is required regarding this project, please be sure to refer to the OPRHP Project Review (PR) number noted above.

Sincerely,

Ruth L. Pierpont

Ruth L. Pierpont

Deputy Commissioner for Historic Preservation